# Equivalent POG block schemes

- Let us consider the following inductor connected in series:

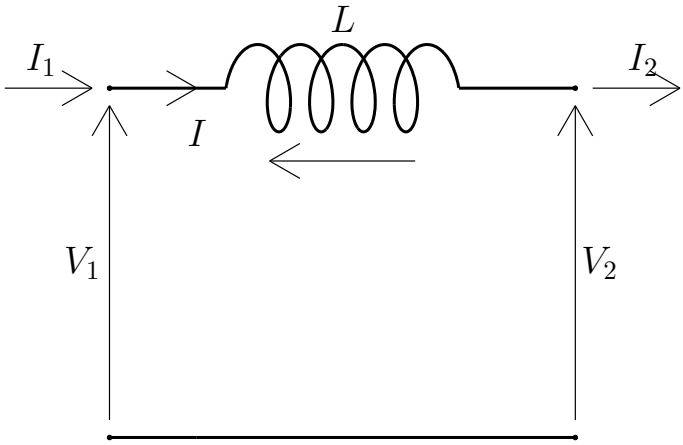


Three mathematically equivalent POG block schemes can be used:

a) Initial condition $\phi_0$ b) Initial condition $I_0$ c) Zero initial condition.

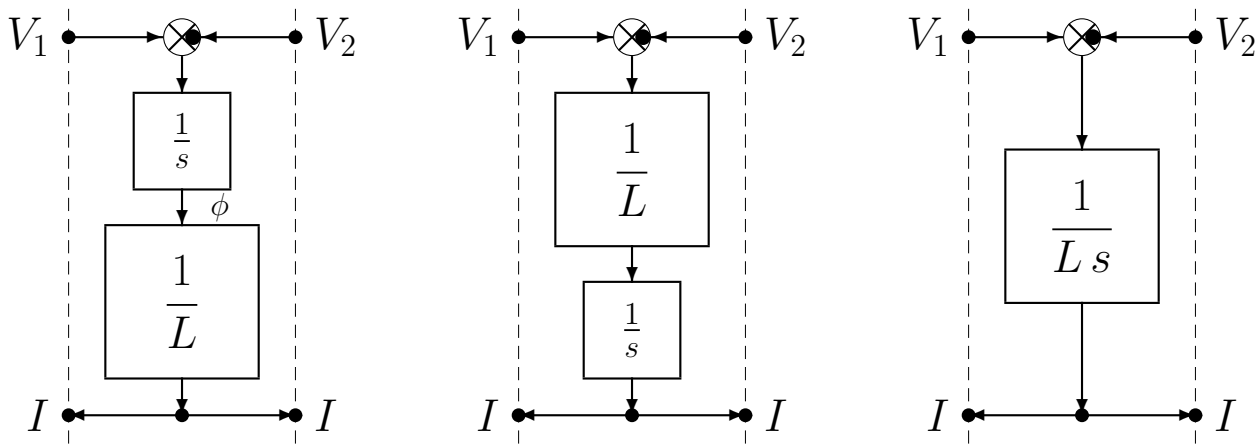


- For linear systems it is always possible to switch the position of two cascade connected linear blocks without modifying the input-output dynamic behavior of the considered system.

- If the three block schemes were implemented in Simulink, their initial conditions would be $\phi = \phi_0$, $I = I_0$ and $I = 0$, respectively.

# Connecting POG block schemes

- Let us consider the following two electric circuits and POG schemes:

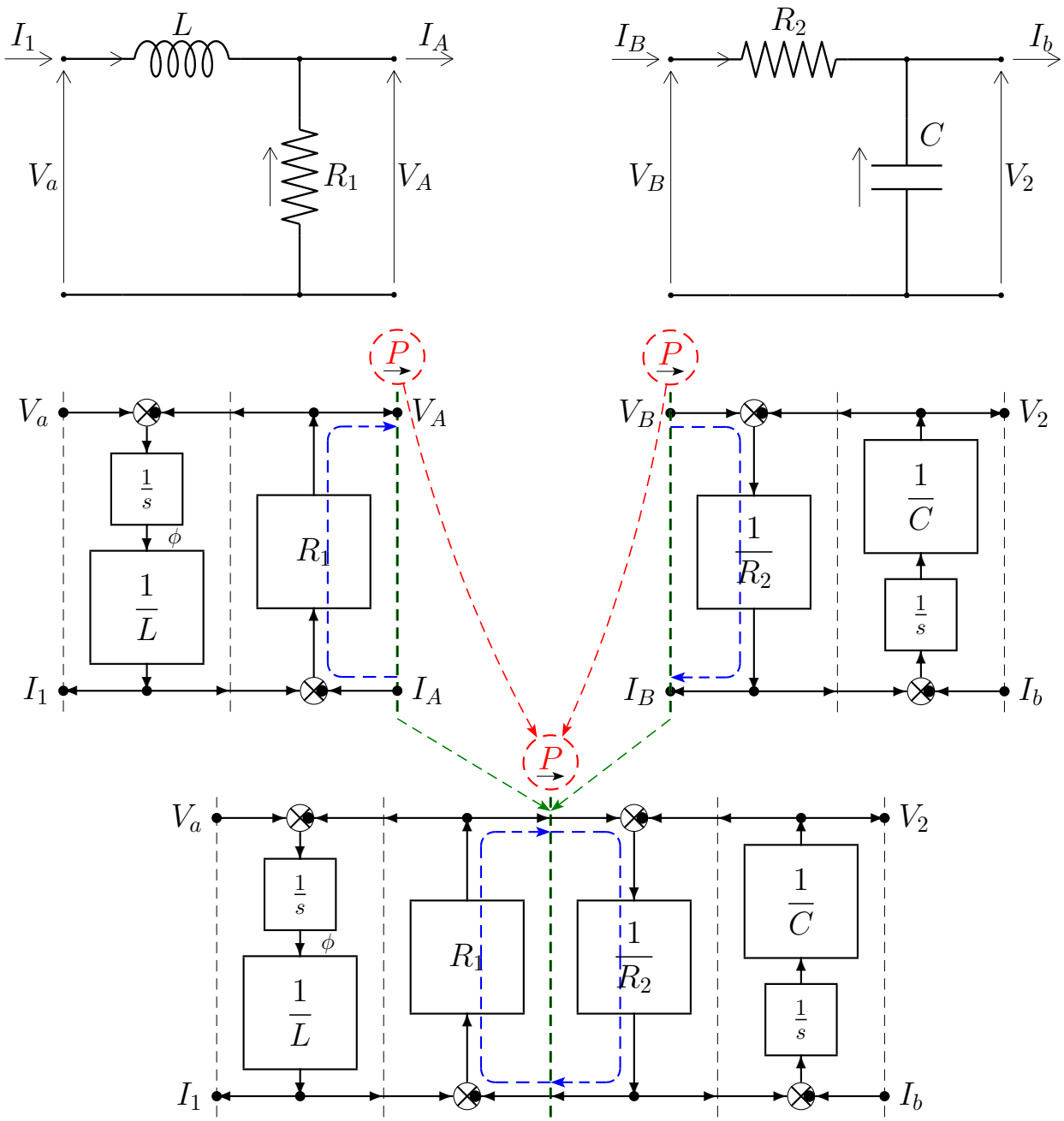


- Two POG block schemes can be "directly connected" only if:

  1) the two power sections "are oriented in the same way";

  2) the two power sections "share the same positive power flow".

- The following two POG schemes "CANNOT be directly connected" because "they are NOT oriented in the same way":

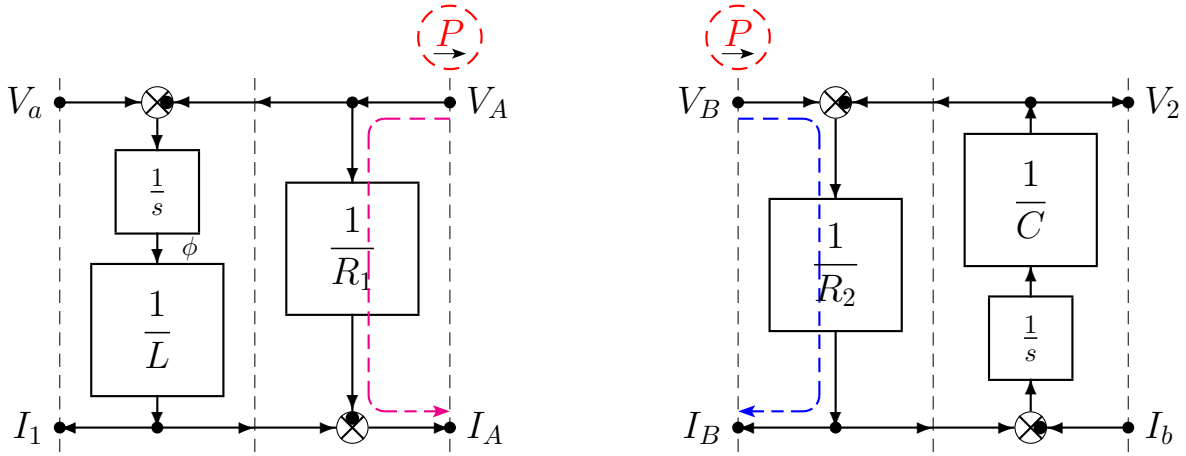


- The following two POG schemes "CANNOT be directly connected" because "they do NOT share the same positive power flow":

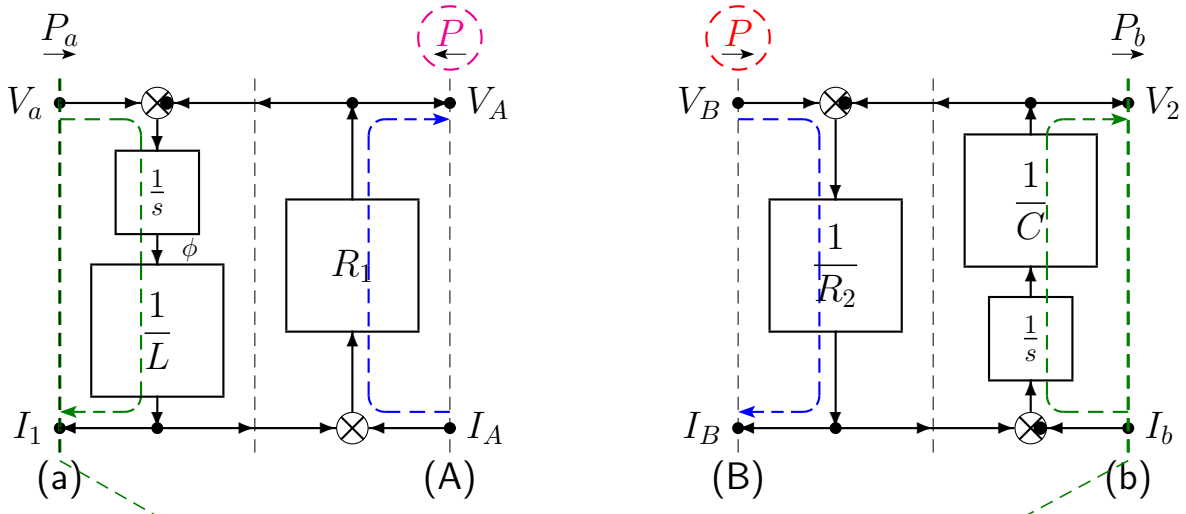


- The two above POG schemes "CAN be directly connected" along sections (a)-(b) because "they share the same orientation and positive power flow":

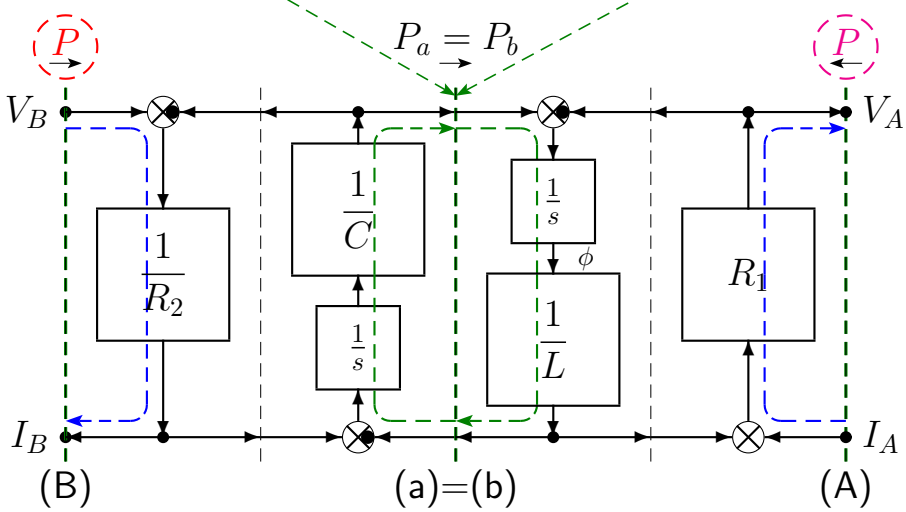

# Algebraic loop

- Let us consider the following electric circuit:

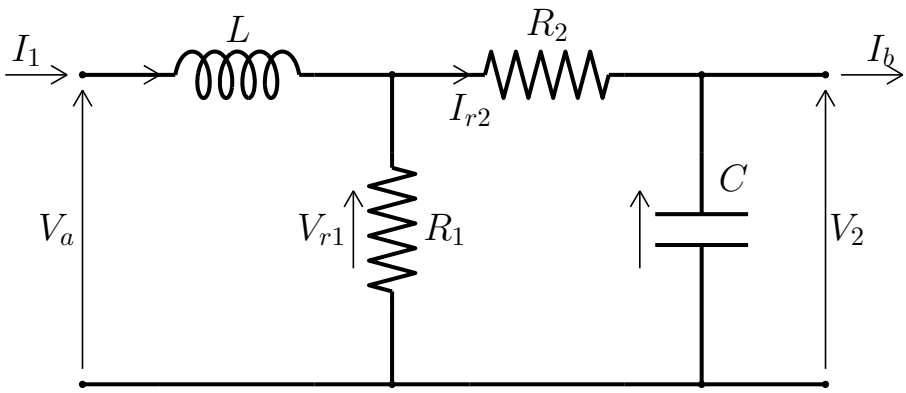


In the corresponding POG block scheme is present an "algebraic loop":

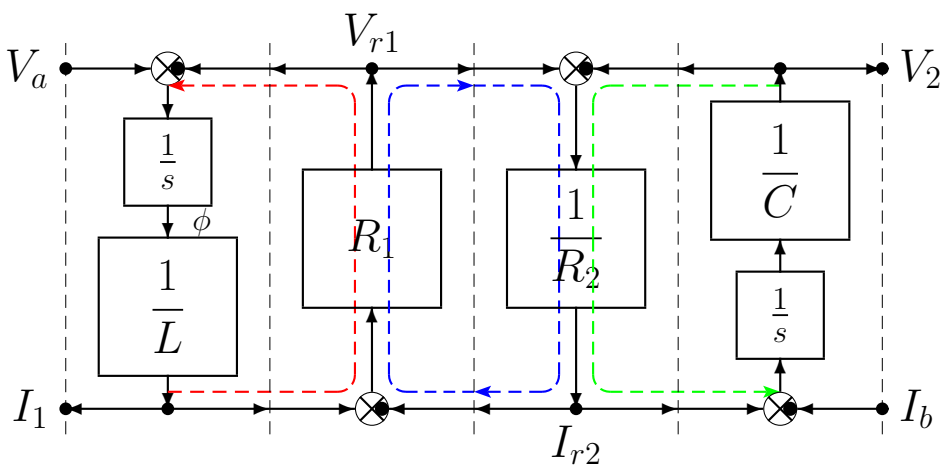


The corresponding POG state space model can still be determined:

$$\begin{bmatrix} L & 0 \\ 0 & C \end{bmatrix} \begin{bmatrix} \dot{I}_1 \\ \dot{V}_2 \end{bmatrix} = \underbrace{\begin{bmatrix} -\frac{R_1}{\Delta} & -\frac{R_1}{R_2\Delta} \\ \frac{R_1}{R_2\Delta} & -\frac{1}{R_2\Delta} \end{bmatrix}}_{\tilde{\mathbf{A}}} \begin{bmatrix} I_1 \\ V_2 \end{bmatrix} + \begin{bmatrix} 1 & 0 \\ 0 & -1 \end{bmatrix} \begin{bmatrix} V_a \\ I_b \end{bmatrix} \qquad (\diamond)$$

where $\Delta$ is the determinant of the POG scheme without the dynamic blocks:

$$\Delta = 1 + \frac{R_1}{R_2}.$$

The coefficient $A_{ij}$ of matric $\mathbf{A}$ is the "transfer gain" (computed using the "Mason formula") of the path that links the $j$-th state variable $x_j$ with the input of the $i$-th integrator.

- The "algebraic loop" can also be eliminated "*graphically*" as follows:

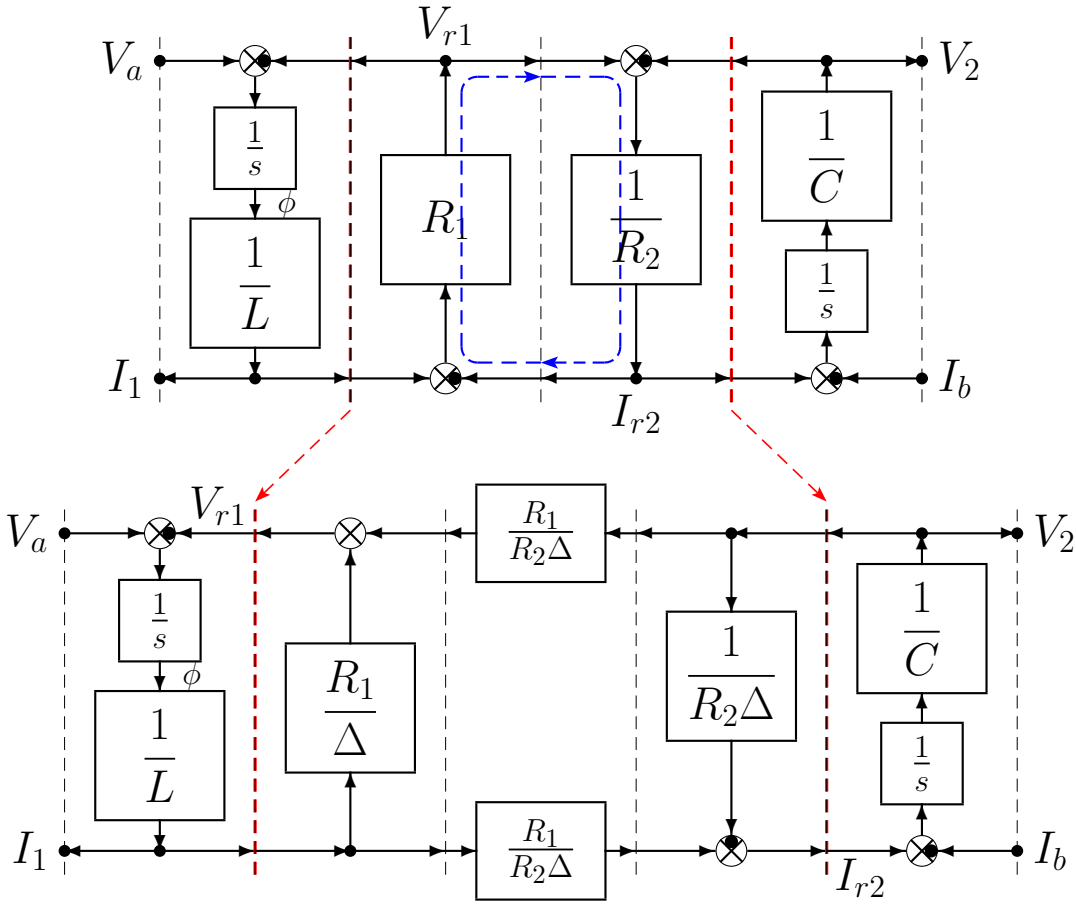


- The same result can also be obtained using the following "mathematical" approach. Add a "spurious" physical element $C_s$ to the original system

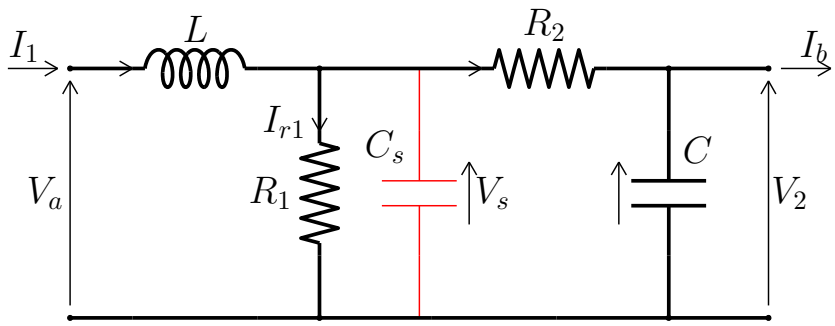


such to eliminate the algebraic loop in the corresponding POG scheme:

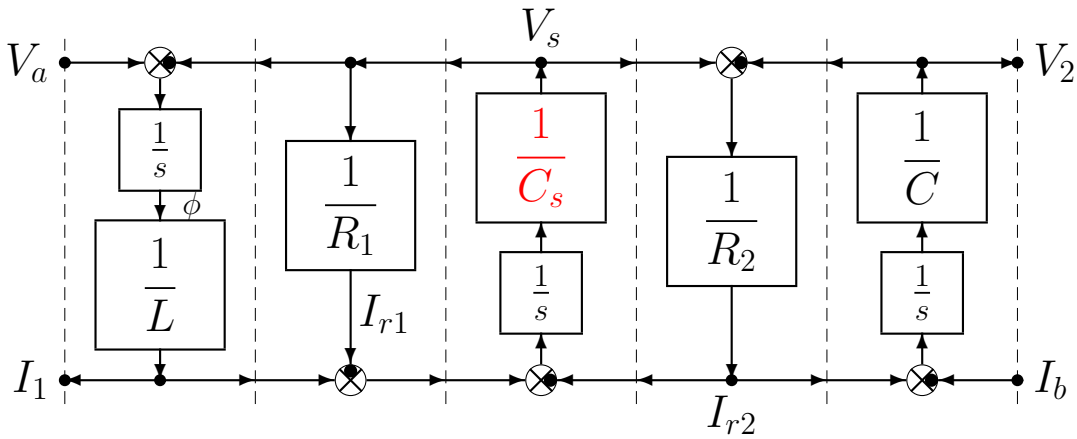

The corresponding POG state space model can now be written easily:

$$\begin{bmatrix} L & 0 & 0 \\ 0 & C_s & 0 \\ 0 & 0 & C \end{bmatrix} \begin{bmatrix} \dot{I}_1 \\ \dot{V}_s \\ \dot{V}_2 \end{bmatrix} = \begin{bmatrix} 0 & -1 & 0 \\ 1 & -\frac{1}{R_1} - \frac{1}{R_2} & \frac{1}{R_2} \\ 0 & \frac{1}{R_2} & -\frac{1}{R_2} \end{bmatrix} \begin{bmatrix} I_1 \\ V_s \\ V_2 \end{bmatrix} + \begin{bmatrix} 1 & 0 \\ 0 & 0 \\ 0 & -1 \end{bmatrix} \begin{bmatrix} V_a \\ I_b \end{bmatrix}$$

When $C_s = 0$ one obtains the following constraint:

$$I_1 + \left( -\frac{1}{R_1} - \frac{1}{R_2} \right) V_s + \frac{1}{R_2} V_2 = 0$$

which can be rewritten as follows:

$$V_s = \frac{R_1 R_2}{R_1 + R_2} I_1 + \frac{R_1}{R_1 + R_2} V_2$$

Let us consider the following "congruent" state space transformation:

$$\mathbf{x} = \mathbf{T}\overline{\mathbf{x}} \qquad \text{where} \qquad \mathbf{T} = \begin{bmatrix} 1 & 0 \\ \frac{R_1 R_2}{R_1+R_2} & \frac{R_1}{R_1+R_2} \\ 0 & 1 \end{bmatrix}$$

The transformed and reduced matrices have the following structure:

$$\overline{\mathbf{x}} = \mathbf{T}\mathbf{x} = \begin{bmatrix} I_1 \\ V_2 \end{bmatrix}, \qquad \overline{\mathbf{L}} = \mathbf{T}^T \mathbf{L} \mathbf{T} = \begin{bmatrix} L & 0 \\ 0 & C \end{bmatrix}$$

$$\overline{\mathbf{A}} = \mathbf{T}^T \mathbf{A} \mathbf{T} = \begin{bmatrix} -\frac{R_1 R_2}{R_1+R_2} & -\frac{R_1}{R_1+R_2} \\ \frac{R_1}{R_1+R_2} & -\frac{1}{R_1+R_2} \end{bmatrix}, \qquad \overline{\mathbf{B}} = \mathbf{T}^T \mathbf{B} = \begin{bmatrix} 1 & 0 \\ 0 & -1 \end{bmatrix}.$$

One can easily verify that the obtained reduced system is equal to the system ($\diamond$) obtained applying the Mason formula to solve the algebraic loop. One can easily verify that the two matrices $\overline{\mathbf{A}}$ and $\tilde{\mathbf{A}}$ are equal:

$$\overline{\mathbf{A}} = \begin{bmatrix} -\frac{R_1 R_2}{R_1+R_2} & -\frac{R_1}{R_1+R_2} \\ \frac{R_1}{R_1+R_2} & -\frac{1}{R_1+R_2} \end{bmatrix} = \begin{bmatrix} -\frac{R_1}{1+\frac{R_1}{R_2}} & -\frac{R_1}{R_2(1+\frac{R_1}{R_2})} \\ \frac{R_1}{R_2(1+\frac{R_1}{R_2})} & -\frac{1}{R_2(1+\frac{R_1}{R_2})} \end{bmatrix} = \begin{bmatrix} -\frac{R_1}{\Delta} & -\frac{R_1}{R_2 \Delta} \\ \frac{R_1}{R_2 \Delta} & -\frac{1}{R_2 \Delta} \end{bmatrix} = \tilde{\mathbf{A}}$$

- **Example. Electric circuit.**

Let us consider the following electric circuit:

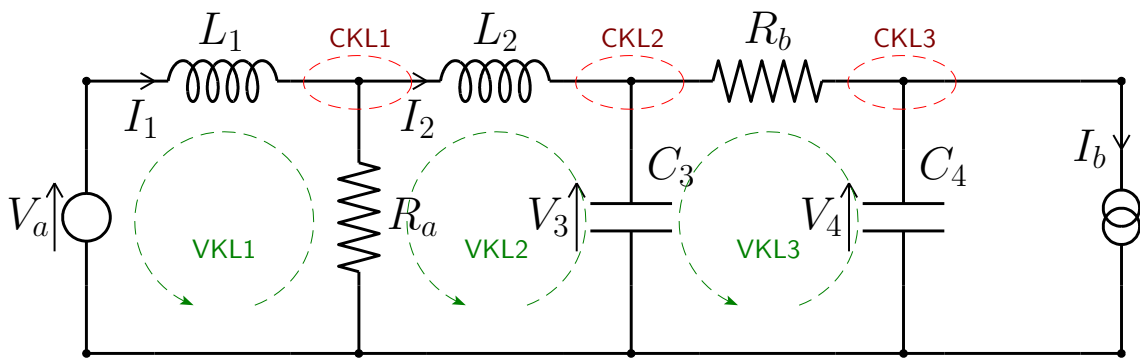


The corresponding P.O.G. block scheme is:

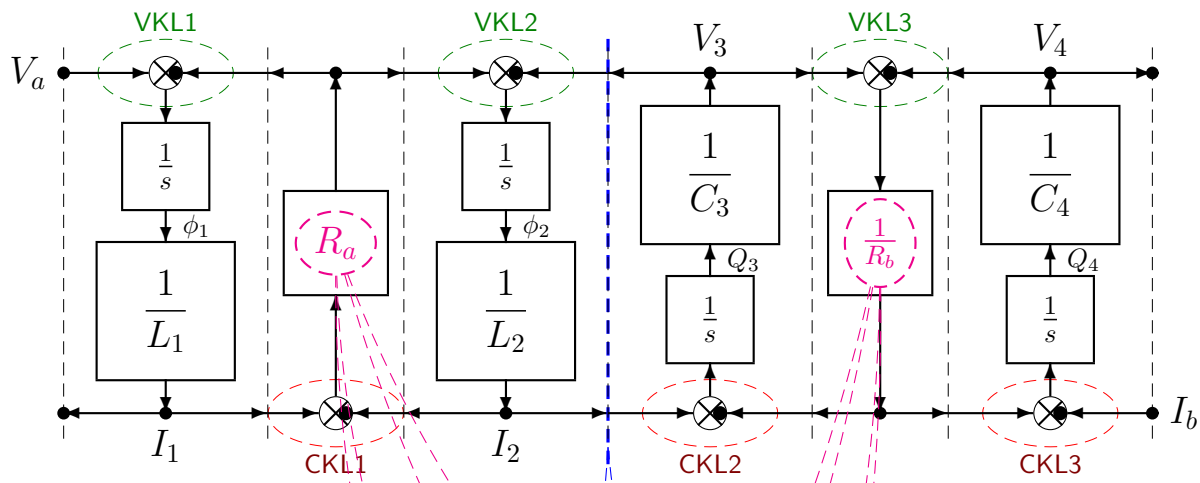


The POG state space dynamic model has the following structure:

$$\underbrace{\begin{bmatrix} L_1 & 0 & 0 & 0 \\ 0 & L_2 & 0 & 0 \\ 0 & 0 & C_3 & 0 \\ 0 & 0 & 0 & C_4 \end{bmatrix}}_{\mathbf{L}} \underbrace{\begin{bmatrix} \dot{I}_1 \\ \dot{I}_2 \\ \dot{V}_3 \\ \dot{V}_4 \end{bmatrix}}_{\dot{\mathbf{x}}} = \underbrace{\begin{bmatrix} -R_a & R_a & 0 & 0 \\ R_a & -R_a & -1 & 0 \\ 0 & 1 & -\frac{1}{R_b} & \frac{1}{R_b} \\ 0 & 0 & \frac{1}{R_b} & -\frac{1}{R_b} \end{bmatrix}}_{\mathbf{A}} \underbrace{\begin{bmatrix} I_1 \\ I_2 \\ V_3 \\ V_4 \end{bmatrix}}_{\mathbf{x}} + \underbrace{\begin{bmatrix} 1 & 0 \\ 0 & 0 \\ 0 & 0 \\ 0 & -1 \end{bmatrix}}_{\mathbf{B}} \underbrace{\begin{bmatrix} V_a \\ I_b \end{bmatrix}}_{\mathbf{u}}$$

The connection coefficients appear within matrix $\mathbf{A}$ only when one type of energy (i.e. magnetic energy in $L$) converts to another different type of energy (i.e. electrostatic energy in $C$).

A dissipative parameter (i.e. $R_a$ and $R_b$) appears 4 times in a symmetric way within matrix $\mathbf{A}$ when the corresponding physical element connect two dynamic elements of the same type.

- **Example**. A chain of carriages and snubbers:

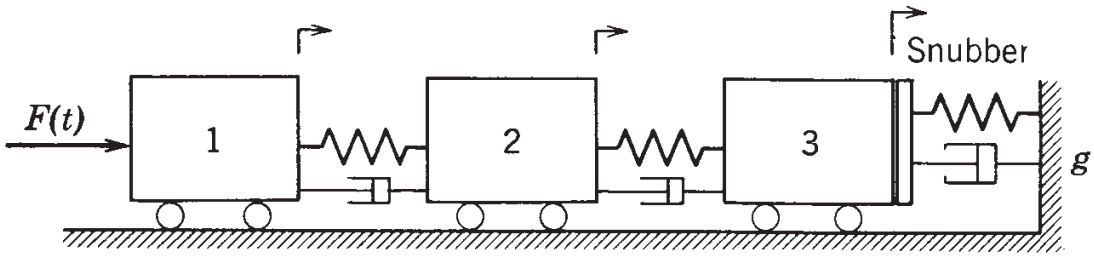


(a)

The symbolic scheme:

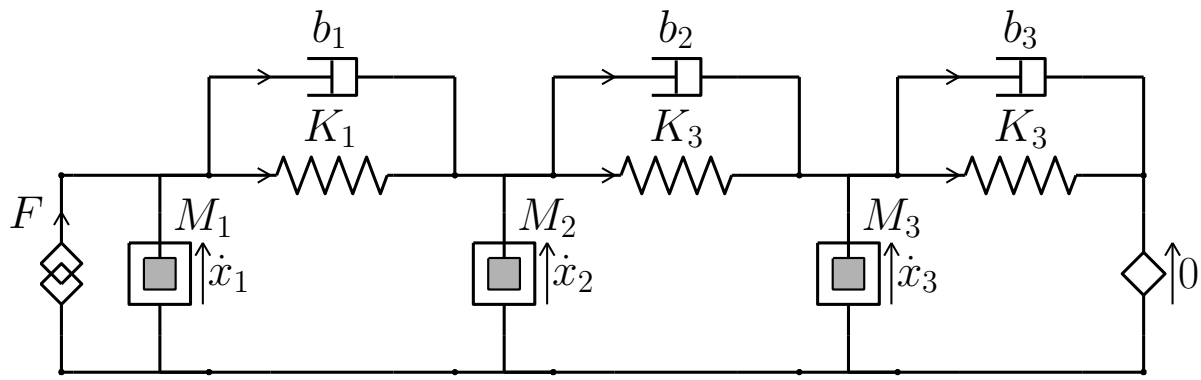


The corresponding POG block scheme:

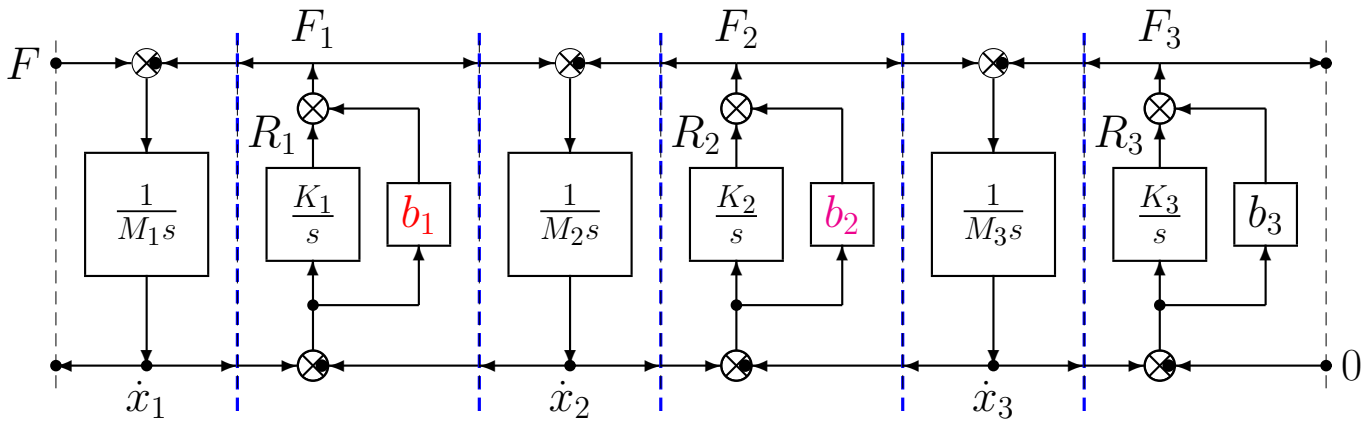


The POG state space dynamic model is:

$$\begin{bmatrix} M_1 & & & & & \\ & \frac{1}{K_1} & & & & \\ & & M_2 & & & \\ & & & \frac{1}{K_2} & & \\ & & & & M_3 & \\ & & & & & \frac{1}{K_3} \end{bmatrix} \begin{bmatrix} \ddot{x}_1 \\ \dot{R}_1 \\ \ddot{x}_2 \\ \dot{R}_2 \\ \ddot{x}_3 \\ \dot{R}_3 \end{bmatrix} = \begin{bmatrix} -b_1 & -1 & b_1 & 0 & 0 & 0 \\ 1 & 0 & -1 & 0 & 0 & 0 \\ b_1 & 1 & -b_1-b_2 & -1 & b_2 & 0 \\ 0 & 0 & 1 & 0 & -1 & 0 \\ 0 & 0 & b_2 & 1 & -b_2-b_3 & -1 \\ 0 & 0 & 0 & 0 & 1 & 0 \end{bmatrix} \begin{bmatrix} \dot{x}_1 \\ R_1 \\ \dot{x}_2 \\ R_2 \\ \dot{x}_3 \\ R_3 \end{bmatrix} + \begin{bmatrix} 1 \\ 0 \\ 0 \\ 0 \\ 0 \\ 0 \end{bmatrix} F$$

- The "across" dynamic elements $\mathcal{D}_e$ connected "in parallel" can be graphically represented only by the following particular POG scheme:

| | **Electrical** | **Mech. Tras.** | **Mech. Rot.** | **Hydraulic** |
|---|---|---|---|---|
| Element $\mathcal{D}_e$ | Capacitor 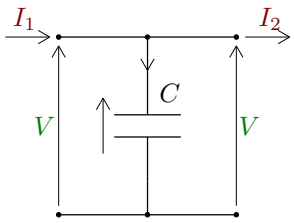  | Mass 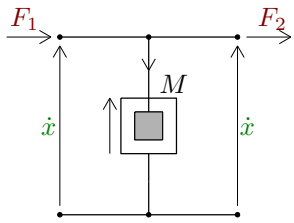  | Inertia 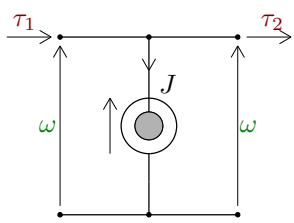  | Hyd. Capacitor 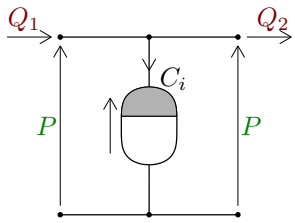  |
| POG scheme | 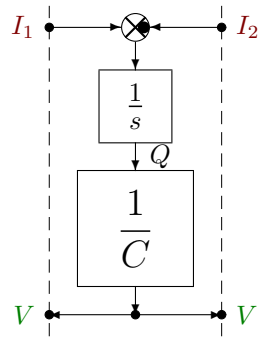  | 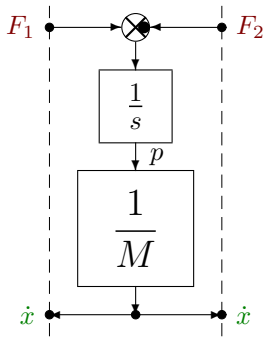  | 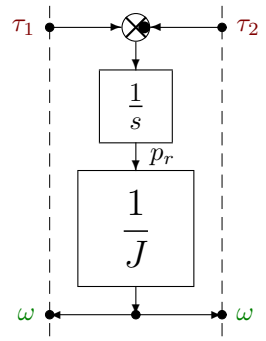  | 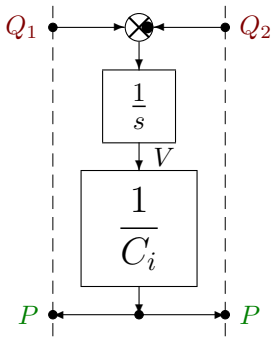  |

- The "through" dynamic elements $\mathcal{D}_f$ connected "in series" can be graphically represented by only one particular POG scheme:

| | **Electrical** | **Mech. Tras.** | **Mech. Rot.** | **Hydraulic** |
|---|---|---|---|---|
| Element $\mathcal{D}_f$ | Inductor 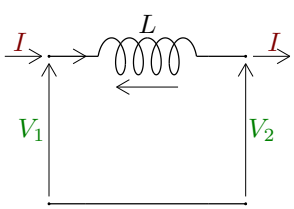  | Spring 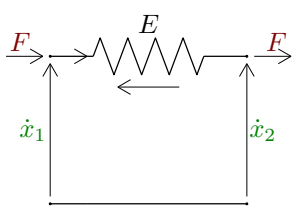  | Rot. Spring 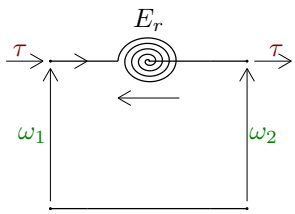  | Hyd. Inductor 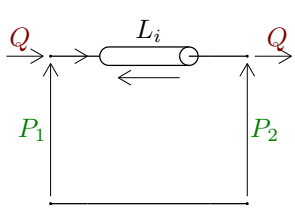  |
| POG scheme | 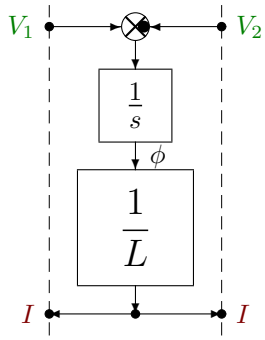  | 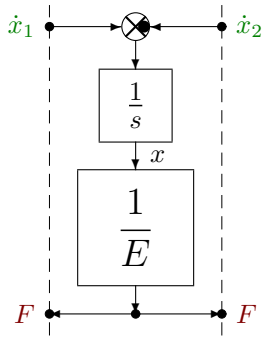  | 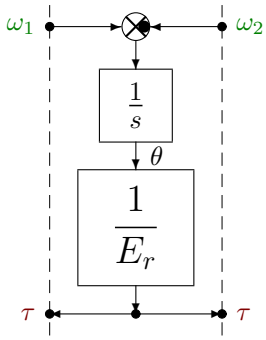  | 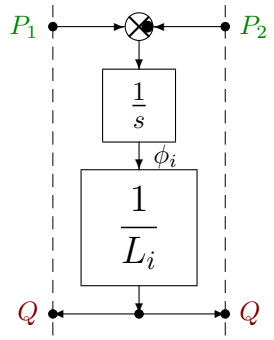  |

- The "across" dynamic elements $\mathcal{D}_e$ connected "in series" can be graphically represented by the following two different POG schemes:

| | **Electrical** | **Mech. Tras.** | **Mech. Rot.** | **Hydraulic** |
|---|---|---|---|---|
| Element $\mathcal{D}_e$ | Capacitor 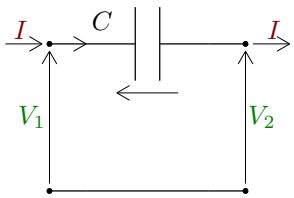  | Mass 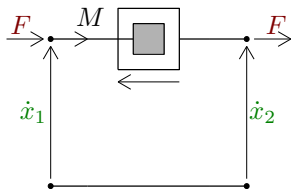  | Inertia 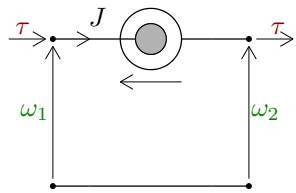  | Hyd. Capacitor 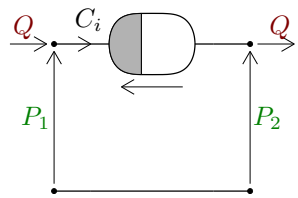  |
| POG scheme 1 | 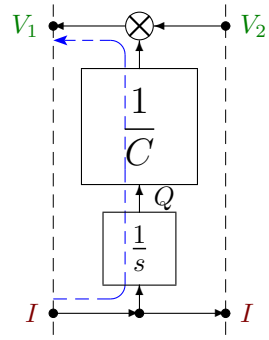  | 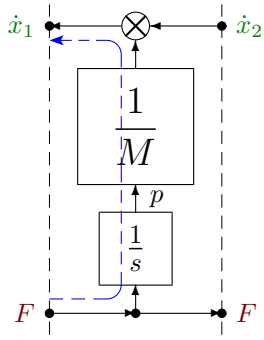  | 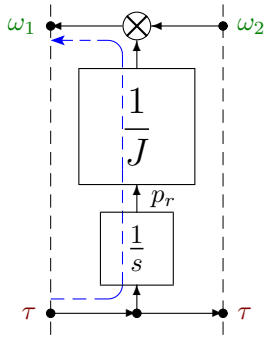  | 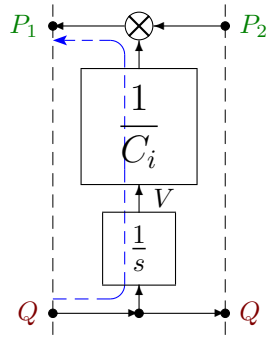  |
| POG scheme 2 | 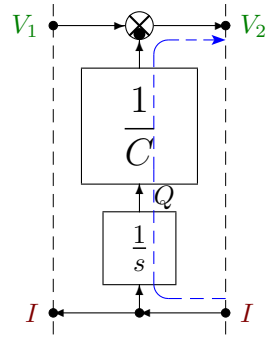  | 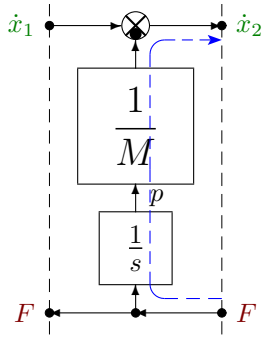  | 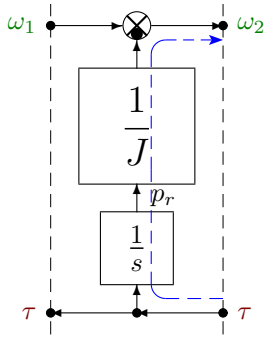  | 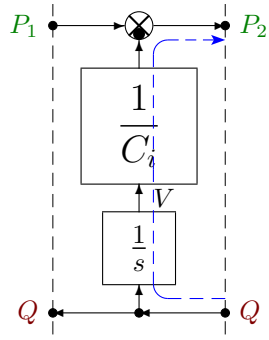  |

- The two POG schemes have opposite input/output power variables. The choice between the two POG block schemes depends on

- The "through" dynamic elements $\mathcal{D}_f$ connected "in parallel" can be graphically represented by the following two different POG schemes:

| | **Electrical** | **Mech. Tras.** | **Mech. Rot.** | **Hydraulic** |
|---|---|---|---|---|
| Element $\mathcal{D}_f$ | Inductor 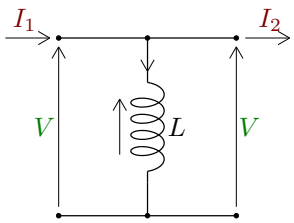  | Spring 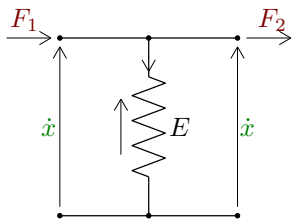  | Rot. Spring 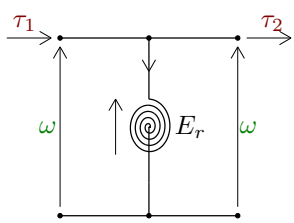  | Hyd. Inductor 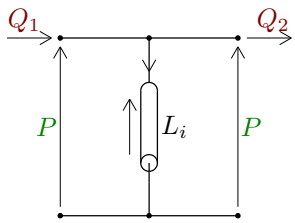  |
| POG scheme 1 | 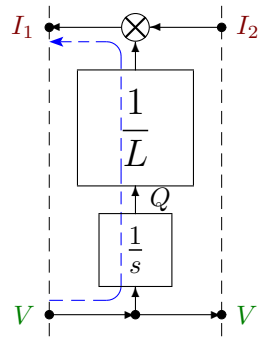  | 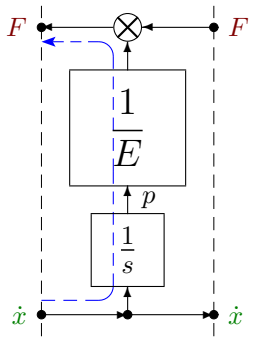  | 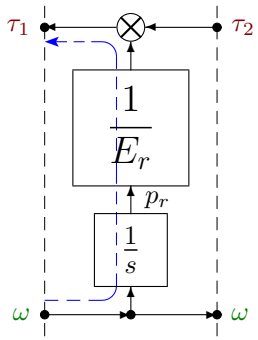  | 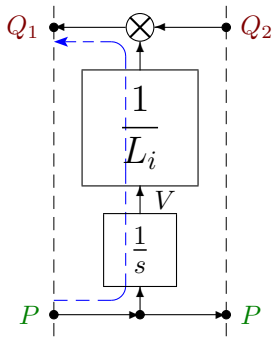  |
| POG scheme 2 | 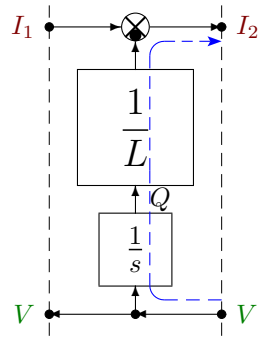  | 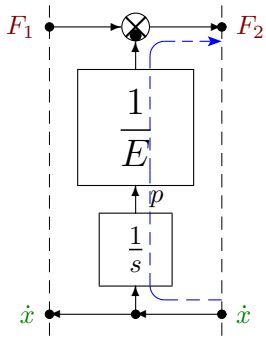  | 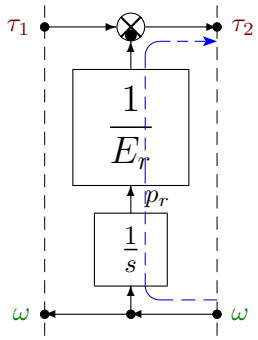  | 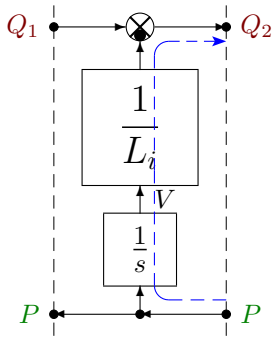  |

- The two POG schemes have opposite input/output power variables. The choice between the two POG block schemes depends on

- "Across-variable" generators:

| | **Eletttrico** | **Mecc. Tras.** | **Mecc. Rot.** | **Idraulico** |
|---|---|---|---|---|
| Generator | 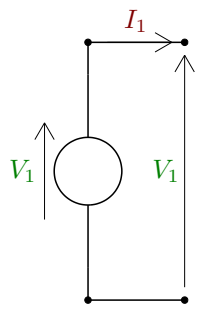 | 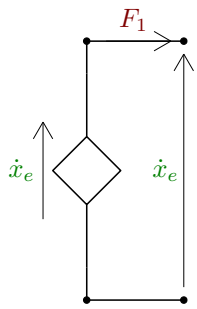 | 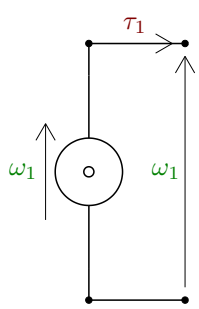 | 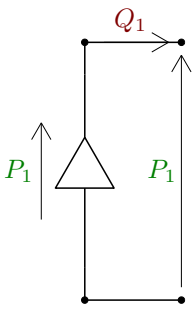 |
| POG | 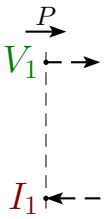 | 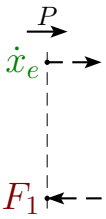 | | 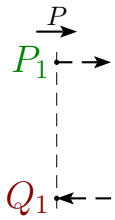 |

- "Through-variable" generators:

| | **Eletttrico** | **Mecc. Tras.** | **Mecc. Rot.** | **Idraulico** |
|---|---|---|---|---|
| Generator | 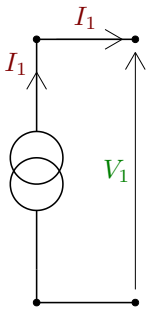 | 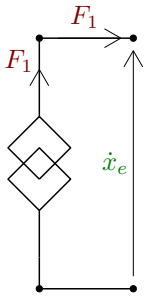 | 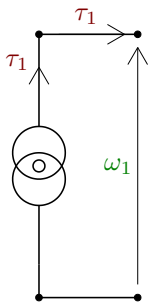 | 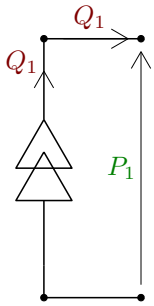 |
| POG | 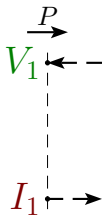 | 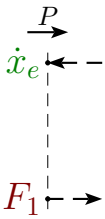 | | 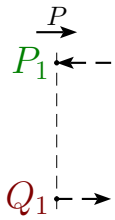 |

- **Example**. Let us consider the following electric circuit:

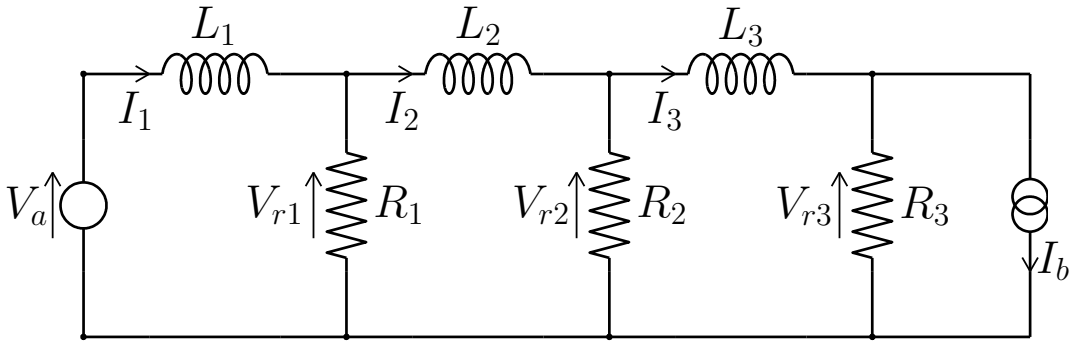


The corresponding POG block scheme:

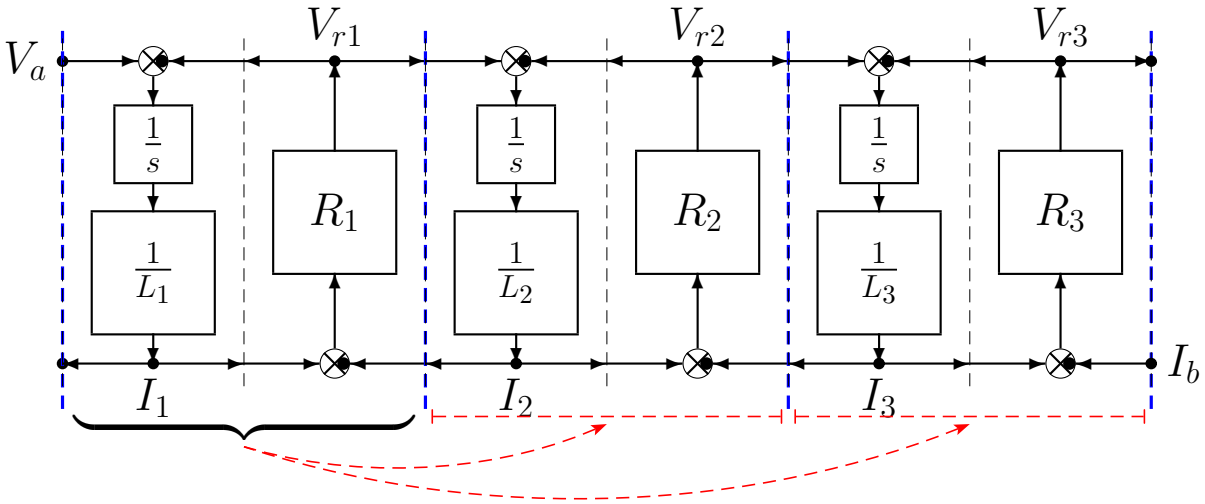


The POG state space dynamic model is:

$$\begin{bmatrix} L_1 & 0 & 0 \\ 0 & L_2 & 0 \\ 0 & 0 & L_3 \end{bmatrix} \begin{bmatrix} \dot{I}_1 \\ \dot{I}_2 \\ \dot{I}_3 \end{bmatrix} = \begin{bmatrix} -R_1 & R_1 & 0 \\ R_1 & -R_1-R_2 & R_2 \\ 0 & R_2 & -R_2-R_3 \end{bmatrix} \begin{bmatrix} I_1 \\ I_2 \\ I_3 \end{bmatrix} + \begin{bmatrix} 1 & 0 \\ 0 & 0 \\ 0 & R_3 \end{bmatrix} \begin{bmatrix} V_a \\ I_b \end{bmatrix}$$

$$\begin{bmatrix} I_1 \\ V_{r3} \end{bmatrix} = \begin{bmatrix} 1 & 0 & 0 \\ 0 & 0 & R_3 \end{bmatrix} \mathbf{x} + \begin{bmatrix} 0 & 0 \\ 0 & -R_3 \end{bmatrix} \begin{bmatrix} V_a \\ I_b \end{bmatrix}$$

Note that, in this case, the power matrix $\mathbf{A}$ is symmetric because the system is characterized only by one type of stored energy, in this case the magnetic energy stored in the three inductances $L_1$, $L_2$ and $L_3$.

- **Example**. Let us consider the following electric circuit:

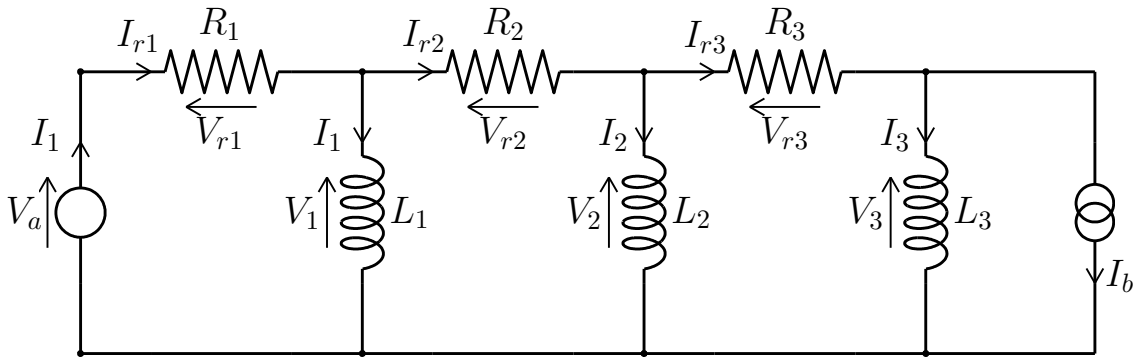


The corresponding POG block scheme:

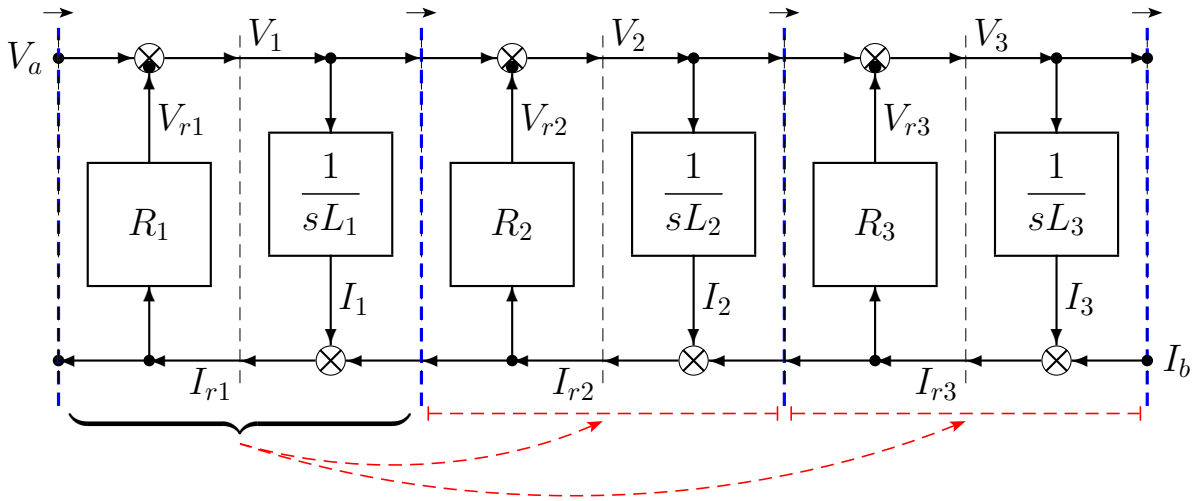


The POG state space dynamic model is:

$$\begin{bmatrix} L_1 & 0 & 0 \\ 0 & L_2 & 0 \\ 0 & 0 & L_3 \end{bmatrix} \begin{bmatrix} \dot{I}_1 \\ \dot{I}_2 \\ \dot{I}_3 \end{bmatrix} = \begin{bmatrix} -R_1 & -R_1 & -R_1 \\ -R_1 & -R_1-R_2 & -R_1-R_2 \\ -R_1 & -R_1-R_2 & -R_1-R_2-R_3 \end{bmatrix} \begin{bmatrix} I_1 \\ I_2 \\ I_3 \end{bmatrix} + \begin{bmatrix} 1 & -R_1 \\ 1 & -R_1-R_2 \\ 1 & -R_1-R_2-R_3 \end{bmatrix} \begin{bmatrix} V_a \\ I_b \end{bmatrix}$$

$$\begin{bmatrix} I_{r1} \\ V_3 \end{bmatrix} = \begin{bmatrix} 1 & 1 & 1 \\ -R_1 & -R_1-R_2 & -R_1-R_2-R_3 \end{bmatrix} \mathbf{x} + \begin{bmatrix} 0 & 1 \\ 1 & -R_1-R_2-R_3 \end{bmatrix} \begin{bmatrix} V_a \\ I_b \end{bmatrix}$$

The power matrix $\mathbf{A}$ is symmetric because the system is characterized only by one type of stored energy.

- **Example**. Let us consider the following electric circuit:

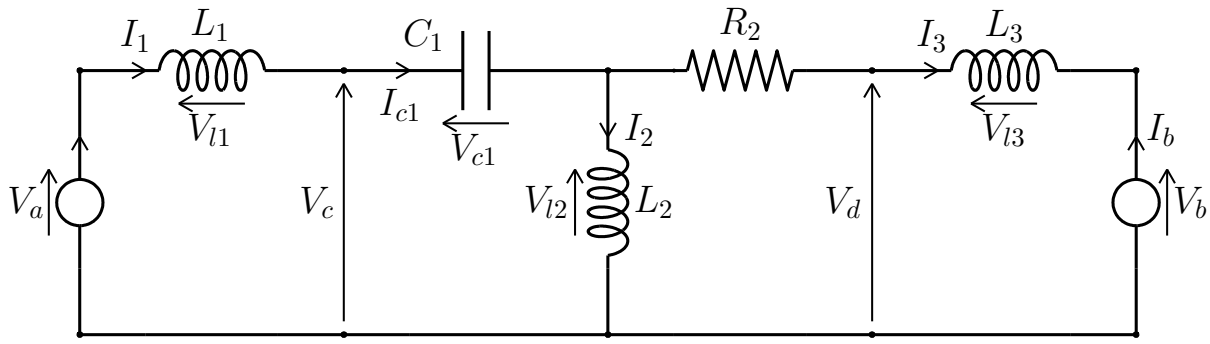


The corresponding POG block scheme:

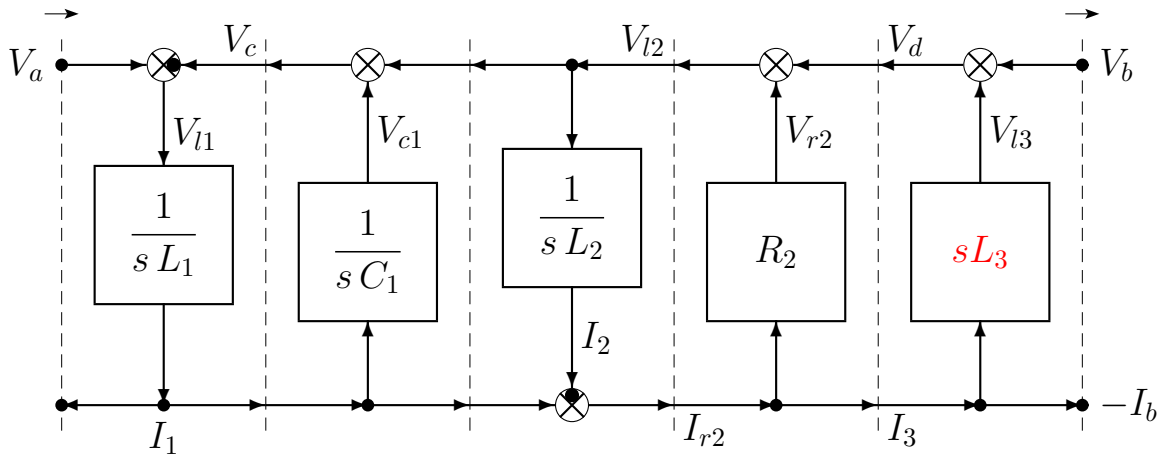


- The system CANNOT be modeled using the "integral causality": the inductance $L_3$ is graphically represented using "derivative causality".

- From the physical scheme it is evident that the state variables $I_1$, $I_2$ and $I_3$ are linked by the following constraint:

$$I_1 = I_2 + I_3$$

- The system can be modeled adding a spurious dynamic element $C_2$ in parallel connection between elements $R_2$ and $L3$:

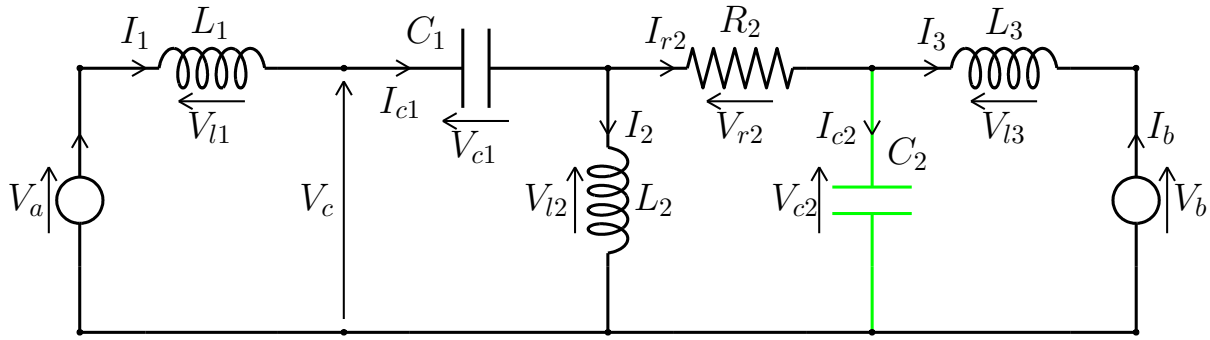


The new POG block scheme is:

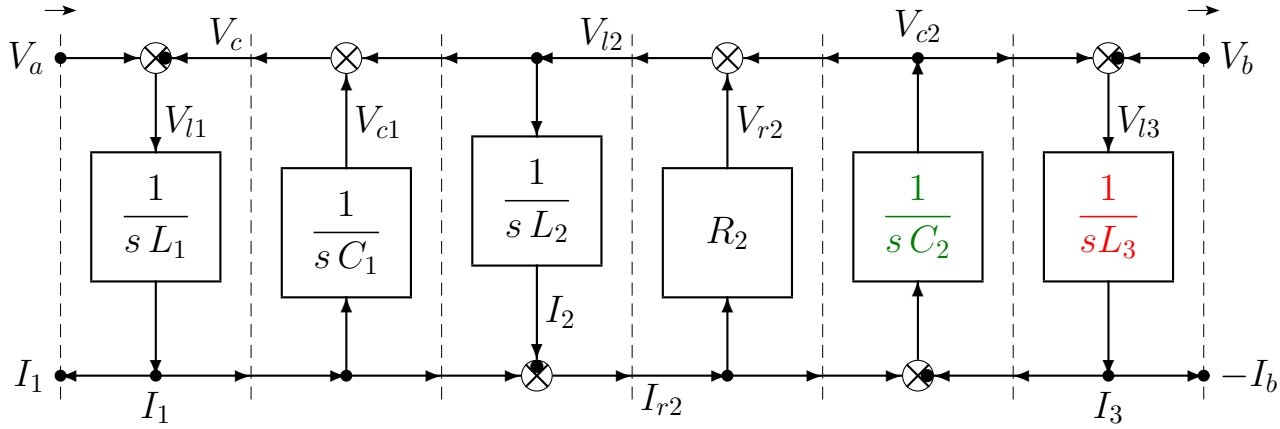


The corresponding POG state space dynamic model is:

$$\begin{bmatrix} L_1 & & & & \\ & C_1 & & & \\ & & L_2 & & \\ & & & C_2 & \\ & & & & L_3 \end{bmatrix} \begin{bmatrix} \dot{I}_1 \\ \dot{V}_{c1} \\ \dot{I}_2 \\ \dot{V}_{c2} \\ \dot{I}_3 \end{bmatrix} = \begin{bmatrix} -R_2 & -1 & R_2 & -1 & 0 \\ 1 & 0 & 0 & 0 & 0 \\ R_2 & 0 & -R_2 & 1 & 0 \\ 1 & 0 & -1 & 0 & -1 \\ 0 & 0 & 0 & 1 & 0 \end{bmatrix} \begin{bmatrix} I_1 \\ V_{c1} \\ I_2 \\ V_{c2} \\ I_3 \end{bmatrix} + \begin{bmatrix} 1 & 0 \\ 0 & 0 \\ 0 & 0 \\ 0 & 0 \\ 0 & -1 \end{bmatrix} \begin{bmatrix} V_a \\ V_b \end{bmatrix}$$

$$\begin{bmatrix} I_1 \\ -I_b \end{bmatrix} = \begin{bmatrix} 1 & 0 & 0 & 0 & 0 \\ 0 & 0 & 0 & 0 & 1 \end{bmatrix} \mathbf{x}$$

When $C_2 = 0$ from the forth equation one obtains the following constraint:

$$I_1 - I_2 - I_3 = 0 \qquad \Rightarrow \qquad I_3 = I_1 - I_2$$

Let us consider the following state space "congruent" transformation:

$$\mathbf{x} = \mathbf{T}\overline{\mathbf{x}} \qquad \Leftrightarrow \qquad \begin{bmatrix} I_1 \\ V_{c1} \\ I_2 \\ V_{c2} \\ I_3 \end{bmatrix} = \begin{bmatrix} 1 & 0 & 0 \\ 0 & 1 & 0 \\ 0 & 0 & 1 \\ 0 & 0 & 0 \\ 1 & 0 & -1 \end{bmatrix} \begin{bmatrix} I_1 \\ V_{c1} \\ I_2 \end{bmatrix}$$

Using the congruent transformation $\mathbf{x} = \mathbf{T}\overline{\mathbf{x}}$ one obtains the following transformed and reduced POG dynamic system:

$$\begin{bmatrix} L_1 + L_3 & & -L_3 \\ 0 & C_1 & 0 \\ -L_3 & & L_2 + L_3 \end{bmatrix} \begin{bmatrix} \dot{I}_1 \\ \dot{V}_{c1} \\ \dot{I}_2 \end{bmatrix} = \begin{bmatrix} -R_2 & -1 & R_2 \\ 1 & 0 & 0 \\ R_2 & 0 & -R_2 \end{bmatrix} \begin{bmatrix} I_1 \\ V_{c1} \\ I_2 \end{bmatrix} + \begin{bmatrix} 1 & -1 \\ 0 & 0 \\ 0 & 1 \end{bmatrix} \begin{bmatrix} V_a \\ V_b \end{bmatrix}$$

$$\begin{bmatrix} I_1 \\ -I_b \end{bmatrix} = \begin{bmatrix} 1 & 0 & 0 \\ 1 & 0 & -1 \end{bmatrix} \mathbf{x}$$

- The state variables $V_{c2}$ and $I_3$ are no more present because $C_2 = 0$ and the constraint $I_3 = I_1 - I_2$.
- The transformed system is NO more decoupled because matrix $\overline{\mathbf{L}} = \mathbf{T}^T\mathbf{L}\mathbf{T}$ is not diagonal. The reduced system has still the structure of a POG dynamic model. Matrix $\overline{\mathbf{L}}$, for example, is still symmetric and definite positive.
- Calculations using Matlab:

```
 -- Matlab commands -------------------------------------------------------
syms L1 L2 L3 C1 C2 R2
C2=0;
LM=diag([L1 C1 L2 C2 L3]);
AM=[-R2 -1  R2  -1  0;
      1  0   0   0  0;
     R2  0 -R2   1  0;
      1  0  -1   0 -1;
      0  0   0   1  0];
BM=[1 0; 0 0; 0 0; 0 0; 0 -1];
CM=[1 0 0 0 0;
    0 0 0 0 1];
T1=sym([ 1  0  0;
         0  1  0;
         0  0  1;
         0  0  0;
         1  0 -1]);
LT=T1.'*LM*T1
%%
AT=simplify(T1.'*AM*T1)
BT=T1.'*BM
CT=CM*T1
```

```
LT =

[ L1 + L3,  0,     -L3]
[       0, C1,       0]
[     -L3,  0, L2 + L3]

AT =

[ -R2, -1,  R2]
[   1,  0,   0]
[  R2,  0, -R2]

BT =

[ 1, -1]
[ 0,  0]
[ 0,  1]

CT =

[ 1, 0,  0]
[ 1, 0, -1]
 ---------------------------------------------------------------------------
```

- Example. Tank with variable section.

| | |
|---|---|
| $Q$ | input volume flow rate |
| $P$ | input pressure |
| $V$ | volume of liquid in the tank |
| $z$ | height of the liquid |
| $a(z)$ | area of the liquid at height $z$ |
| $A$ | area of the base section |
| $\alpha$ | slope of the liquid area |
| $p_0$ | pressure per unit of height |

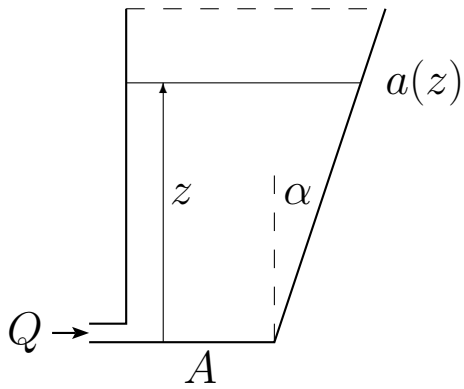


- Two equivalent POG block schemes can be used:

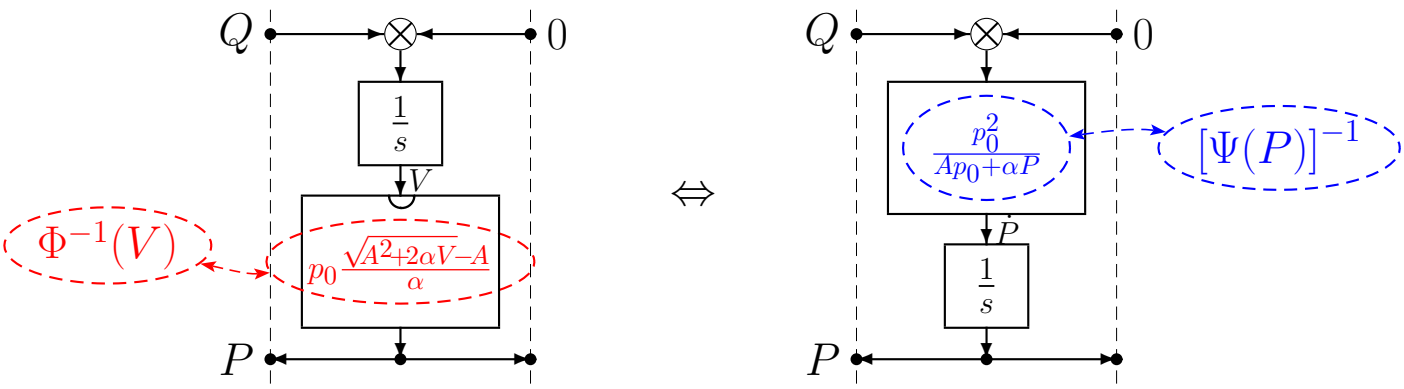


- The area of the liquid $a(z)$ at height $z$ and the volume of liquid $V$ are:

$$a(z) = A + \alpha z, \qquad V = \int_0^z a(z)dz = A\,z + \frac{\alpha\,z^2}{2}$$

- Since $z = \frac{P}{p_0}$, functions $V = \Phi(P)$ and $P = \Phi^{-1}(V)$ are defined as follows:

$$V = \Phi(P) = A\,\frac{P}{p_0} + \frac{\alpha\,P^2}{2p_0^2}, \qquad P = \Phi^{-1}(V) = p_0\frac{\sqrt{A^2 + 2\alpha\,V} - A}{\alpha}.$$

- Functions $\Psi(P)$ and $[\Psi(P)]^{-1}$ can be obtained as follows:

$$\Psi(P) = \frac{\partial\Phi(P)}{\partial P} = \frac{A}{p_0} + \frac{\alpha\,P}{p_0^2}, \qquad [\Psi(P)]^{-1} = \frac{p_0^2}{Ap_0 + \alpha P}$$

- The energy $E_s$ stored in the system is:

$$E_s = \int_0^V \Phi^{-1}(V)\,dV = \frac{p_0}{3\alpha^2}\left[(A^2 + 2\alpha\,V)^{\frac{3}{2}} - 3\alpha\,A\,V - A^3\right].$$

- Example. A translating mass.

| | |
|---|---|
| $x$ | position of the mass |
| $\dot{x}$ | velocity of the mass |
| $m$ | value of the mass |
| $m_0$ | value of the mass at rest |
| $c$ | velocity of the light |
| $p$ | momentum of the mass |

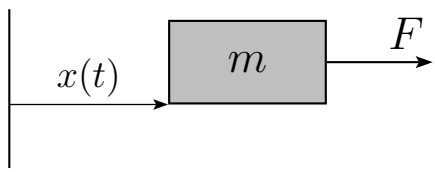


- The system can be described using one of the following POG schemes:

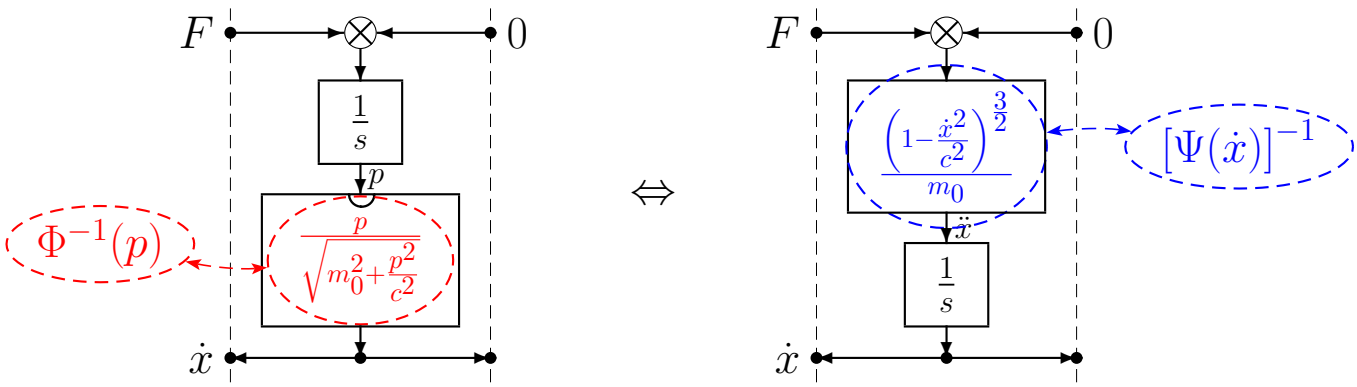


- Taking into account the relativistic effects, mass $m$ and $p = \Phi(\dot{x})$ are:

$$m = \frac{m_0}{\sqrt{1-\frac{\dot{x}^2}{c^2}}}, \qquad p = \Phi(\dot{x}) = m\,\dot{x} = \frac{m_0\,\dot{x}}{\sqrt{1-\frac{\dot{x}^2}{c^2}}}$$

- The inverse function $\Phi^{-1}(p)$ can be expressed as follows:

$$\dot{x} = \Phi^{-1}(p) = \frac{p}{\sqrt{m_0^2+\frac{p^2}{c^2}}}$$

- Functions $\Psi(\dot{x})$ and $[\Psi(\dot{x})]^{-1}$ can be computed as follows:

$$\Psi(\dot{x}) = \frac{\partial\Phi(\dot{x})}{\partial\dot{x}} = \frac{m_0}{\left(1-\frac{v^2}{c^2}\right)^{\frac{3}{2}}}, \qquad [\Psi(\dot{x})]^{-1} = \frac{\left(1-\frac{v^2}{c^2}\right)^{\frac{3}{2}}}{m_0}$$

- The energy $E_s$ stored in the system can be expressed as follows:

$$E_s = \int_0^p \Phi^{-1}(p)\,dp = \int_0^p \frac{p}{\sqrt{m_0^2+\frac{p^2}{c^2}}}\,dp = m_0\,c^2\left[\sqrt{1+\frac{p^2}{m_0^2c^2}}-1\right]$$

- Nonlinear hydraulic capacitor.

| | |
|---|---|
| $Q_1$ | input volume flow rate |
| $Q_2$ | output volume flow rate |
| $P$ | pressure of the capacitor |
| $V$ | volume of liquid within the capacitor |
| $V_G$ | volume of gas within the capacitor |
| $P_0$ | pressure of the empty capacitor |
| $V_0$ | volume of the empty capacitor |

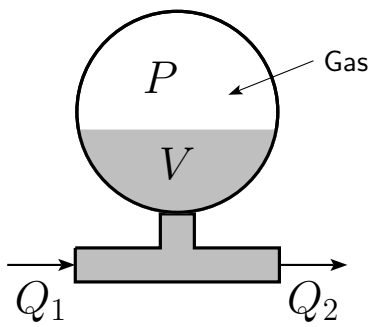


- The system can be described using the following POG schemes:

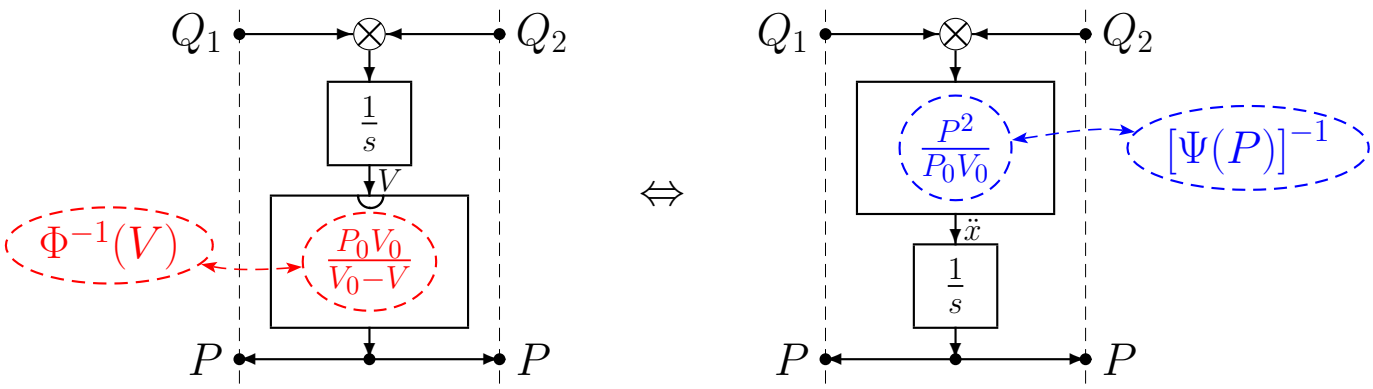


- The gas pressure $P$ within the capacitor satisfies the following equation:

$$P\,V_G = P_0 V_0, \qquad V_G = V_0 - V \qquad \rightarrow \qquad P = \Phi^{-1}(V) = \frac{P_0 V_0}{V_0 - V}$$

- The constitutive equation of the nonlinear hydraulic capacitor is:

$$V = \Phi(P) = V_0 - \frac{P_0 V_0}{P}$$

- Function $\Psi(P)$ and $[\Psi(P)]^{-1}$ can be computed as follows:

$$\Psi(P) = \frac{\partial \Phi(P)}{\partial P} = \frac{P_0 V_0}{P^2}, \qquad [\Psi(P)]^{-1} = \frac{P^2}{P_0 V_0}$$

- The energy $E_s$ stored in the system can be expressed as follows:

$$E_s = \int_0^V \Phi^{-1}(p)\,dp = \int_0^V \frac{P_0 V_0}{V_0 - V}\,dV = P_0 V_0 \ln \frac{V_0}{(V_0 - V)}$$

# General nonlinear vectorial case

- In the general nonlinear vectorial case following POG schemes can be used:

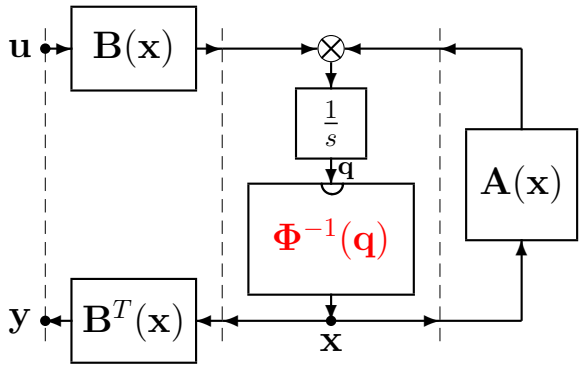


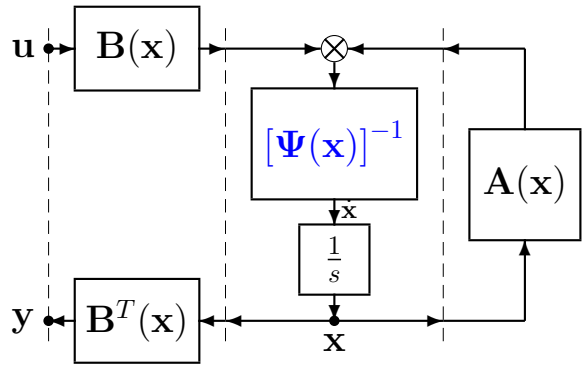


- The corresponding POG state space equations are the following:

$$\begin{cases} \dfrac{d\boldsymbol{\Phi}(\mathbf{x})}{dt} = \mathbf{A}(\mathbf{x})\mathbf{x} + \mathbf{B}(\mathbf{x})\mathbf{u} \\ \mathbf{y} = \mathbf{B}^T(\mathbf{x})\mathbf{x} \end{cases} \qquad \begin{cases} \boldsymbol{\Psi}(\mathbf{x})\,\dot{\mathbf{x}} = \mathbf{A}(\mathbf{x})\mathbf{x} + \mathbf{B}(\mathbf{x})\mathbf{u} \\ \mathbf{y} = \mathbf{B}^T(\mathbf{x})\mathbf{x} \end{cases}$$

- It can be proved that vector $\boldsymbol{\Phi}^{-1}(\mathbf{q})$ can be computed as follows:

$$\boldsymbol{\Phi}^{-1}(\mathbf{q}) = \frac{\partial E(\mathbf{q})}{\partial \mathbf{q}^T}$$

where $E(\mathbf{q})$ is the energy stored within the system expressed as a function of the energy variables $\mathbf{q}$.

- It can be proved that matrix $\boldsymbol{\Psi}(\mathbf{x})$ can be computed as follows:

$$\boldsymbol{\Psi}(\mathbf{x}) = \frac{\partial \boldsymbol{\Phi}(\mathbf{x})}{\partial \mathbf{x}^T} = \left.\frac{\partial^2 E(\mathbf{q})}{\partial \mathbf{q}^T \partial \mathbf{q}}\right|_{\mathbf{q}=\boldsymbol{\Phi}(\mathbf{x})}$$

where $\mathbf{q} = \boldsymbol{\Phi}(\mathbf{x})$ is the constitutive relation of the nonlinear vectorial dynamic element.

- The energy $E_s$ stored in the system can be always computed as follows:

$$E_s = \int_0^{\mathbf{q}} \boldsymbol{\Phi}^{-1}(\mathbf{q})\, d\mathbf{q}$$

# Relative degree of a transfer function $G(s)$

- Let us consider a generic block scheme:

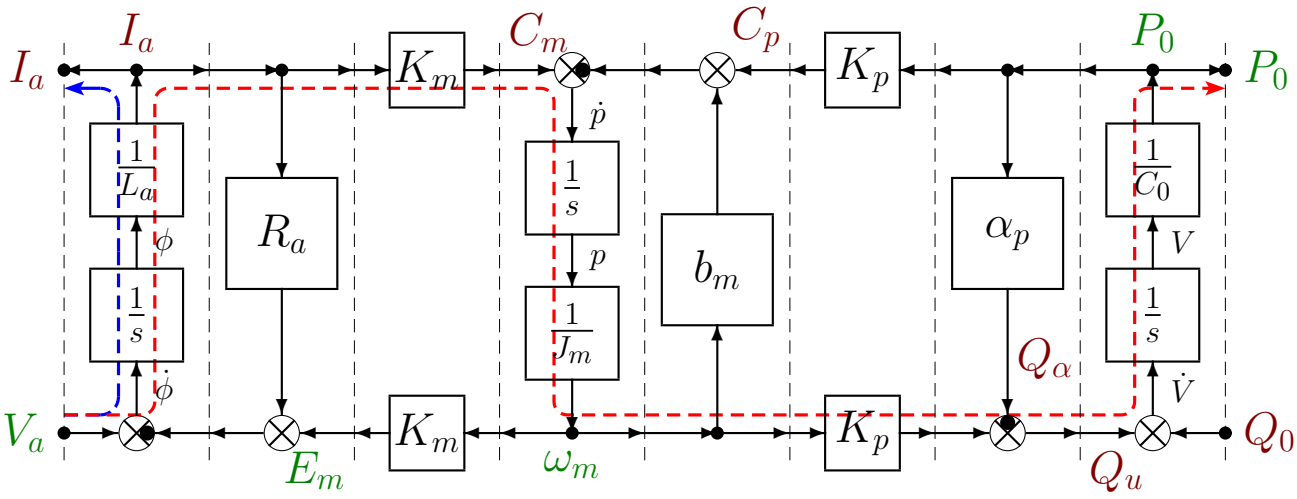


- For each transfer function $G(s) = \frac{Y(s)}{U(s)}$ which links an input $u(t)$ to the output $y(t)$, the following properties hold:

  1) the order of function $G(s)$ is equal to the number $n$ of independent dynamic elements which store energy within the system;
  2) the poles of function $G(s)$ are equal to the solutions of equation $\Delta(s) = 0$ where $\Delta(s)$ is the determinant of the block scheme;
  3) the **relative degree** of function $G(s)$ is equal to the minimum number $r$ of integrators which is present in the set of all the paths that links the input $u(t)$ to the output $y(t)$;
  4) if there is only one path $\mathcal{P}_1$ that links the input $u(t)$ to the output $y(t)$, then the zeros of function $G(s)$ are equal to the solutions of equation $\Delta_1(s) = 0$ where $\Delta_1(s)$ is the determinant of the reduced block scheme obtained from the original one eliminating all the blocks touched by the path $\mathcal{P}_1$;

  $G(s) = \frac{P_0}{V_a}$ has 3 poles and 0 zeros because the relative degree is $r = 3$;

  $G(s) = \frac{I_a}{V_a}$ has 3 poles and 2 zeros because the relative degree is $r = 1$;

- <u>Note</u>: the higher is the relative degree the more difficult is the control.