Mathematical models of physical systems

Modeling a physical system is always a compromise between the simplicity of the model and the accuracy of the model.

Example. Let us consider the following electric network:

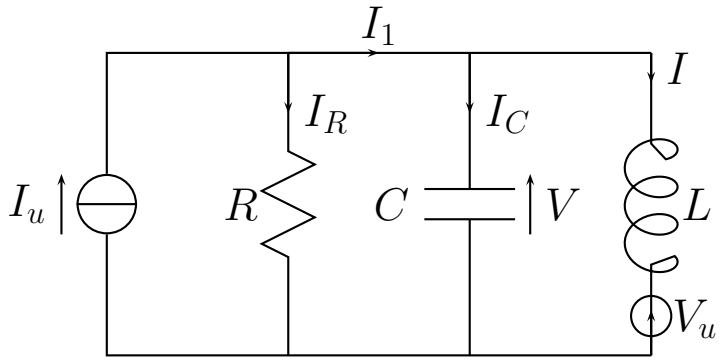

The system dynamics can be described using the following block scheme:

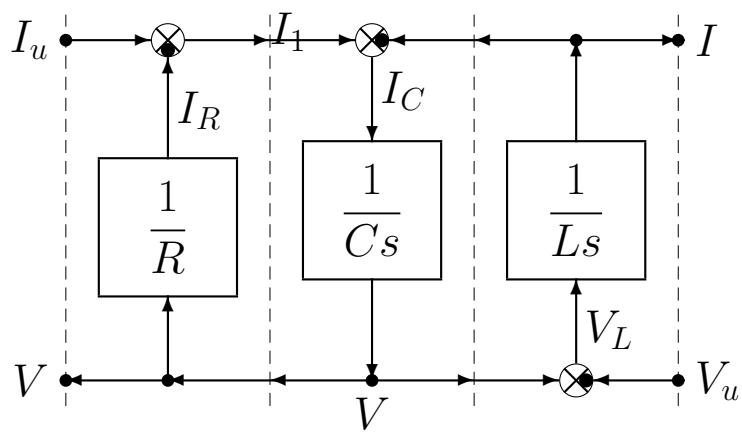

The dynamic model of this system can be obtained by choosing a state variable for each dynamic element of the system, i.e. for each physical element which stores energy. In this case Q is the electric charge and Φ is the magnetic flux:

$$Q = C\,V, \qquad\qquad \Phi = LI$$

The dynamic equations of the system are:

$$\begin{cases} \dfrac{dQ}{dt} = C\dot{V} = I_u - I - \dfrac{V}{R} \\ \dfrac{d\Phi}{dt} = L\dot{I} = V_L = V - V_u \end{cases}$$

Let $\mathbf{x}$ denote the state vector:

$$\mathbf{x} = \begin{bmatrix} V \\ I \end{bmatrix} \quad \rightarrow \quad \dot{\mathbf{x}} = \begin{bmatrix} \dot{V} \\ \dot{I} \end{bmatrix}, \qquad \mathbf{u} = \begin{bmatrix} I_u \\ V_u \end{bmatrix}$$

The dynamic equations of the system can be written as follows:

$$\begin{cases} \dot{\mathbf{x}}(t) &= \begin{bmatrix} -\frac{1}{CR} & -\frac{1}{C} \\ \frac{1}{L} & 0 \end{bmatrix} \mathbf{x}(t) + \begin{bmatrix} \frac{1}{C} & 0 \\ 0 & -\frac{1}{L} \end{bmatrix} \mathbf{u}(t) \\ y(t) &= \begin{bmatrix} 1 & 0 \end{bmatrix} \mathbf{x}(t) \end{cases}$$

In this case the system is linear and time-invariant.

Let us suppose that we want to take into account in the model of the fact that the resistance varies with the temperature: $R = R(\theta)$. In this case we have to add to the mathematical description of the system the following differential equation which describes the thermal dynamics of the resistance:

$$\frac{d[c\theta]}{dt} = \frac{V^2}{R} - G(\theta - \theta_e) \qquad \rightarrow \qquad \dot{\theta} = \frac{V^2}{cR} - \frac{G}{c}\theta + \frac{G}{c}\theta_e$$

The parameters have the following meaning:

$$\begin{cases} c\theta & \text{heat stored in the resistance} \\ \theta & \text{resistance temperature} \\ \theta_e & \text{external temperature} \\ c & \text{thermal capacitance of the resistance} \\ G & \text{thermal conductance of the resistance} \end{cases}$$

The nonlinear dynamic equations of the system are now the following:

$$\begin{cases} \dot{V} &= \dfrac{I_u}{C} - \dfrac{V}{C\,R(\theta)} - \dfrac{I}{C} \\ \dot{I} &= \dfrac{V}{L} - \dfrac{V_u}{L} \\ \dot{\theta} &= \dfrac{V^2}{c\,R(\theta)} - \dfrac{G}{c}\theta + \dfrac{G}{c}\theta_e \end{cases}$$

Denoting with $\overline{\mathbf{x}}$ and $\overline{\mathbf{u}}$ the stator an output vectors:

$$\overline{\mathbf{x}} = \begin{bmatrix} V \\ I \\ \theta \end{bmatrix}, \qquad \rightarrow \qquad \overline{\mathbf{u}} = \begin{bmatrix} I_u \\ V_u \\ \theta_e \end{bmatrix}$$

the system can be described in compact form as follows:

$$\dot{\overline{\mathbf{x}}} = \mathbf{f}(\overline{\mathbf{x}}, \overline{\mathbf{u}})$$

Matlab file "Second_Order_Step_Trajectory.m":

```
-----------------------------------------------------------------------
Volt=1; Amp=1; Ohm=Volt/Amp; sec = 1;
Henry=Volt*sec/Amp; Farad=1;
C=0.01*Farad;
L=0.01*Henry;
R=1*Ohm;
A=[-1/(C*R)  -1/(C); 1/L   0];
B=[-1/(C*R)      0 ;   0 -1/L];
C=[ 1   0];   D=0;
Sys=ss(A,B(:,1),C,D);
pole(Sys)
[yt,t,x]=step(Sys);
%%%%
figure(1); clf
plot(x(:,1),x(:,2),'Linewidth',1.5);     % Plot
hold on; axis square; grid on;
xlabel('Voltage V')                      % Label along axis x
ylabel('Current I')                      % Label along axis y
title('State Space trajectories')        % Title
%%%%
figure(2); clf
plot(t,x(:,1),'Linewidth',1.5);     % Plot
grid on;
xlabel('Time [s]')                       % Label along axis x
ylabel('Voltage V')                      % Label along axis y
title('Voltage step response')           % Title
%%%%
figure(3); clf
plot(t,x(:,2),'Linewidth',1.5);     % Plot
grid on;
xlabel('Time [s]')                       % Label along axis x
ylabel('Current I')                      % Label along axis y
title('Current step response')           % Title
-----------------------------------------------------------------------
```

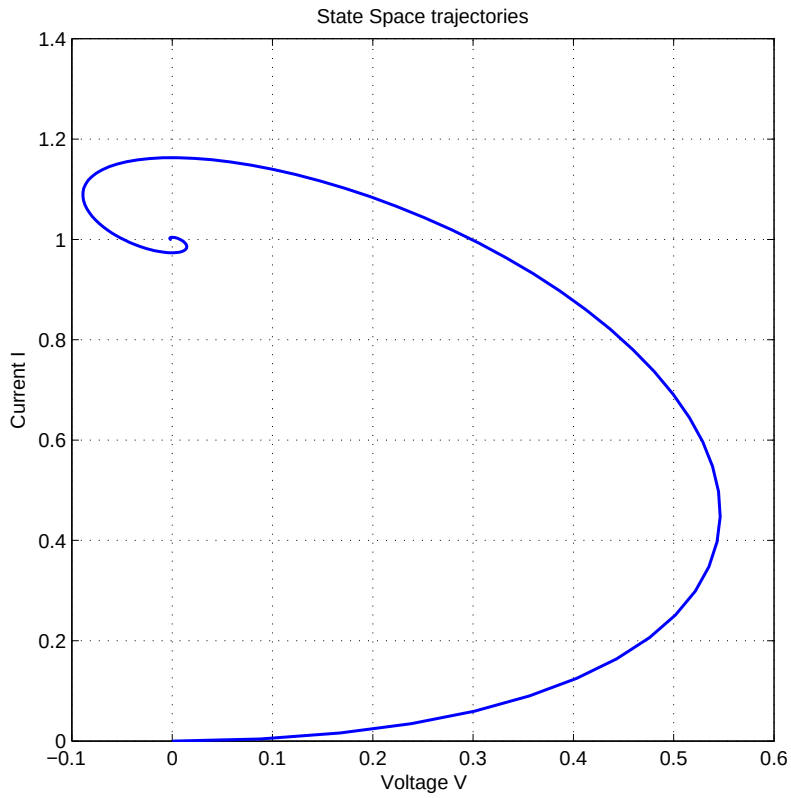

Step response $I_u = 1$ A, $V_u = 0$ V: Voltage V

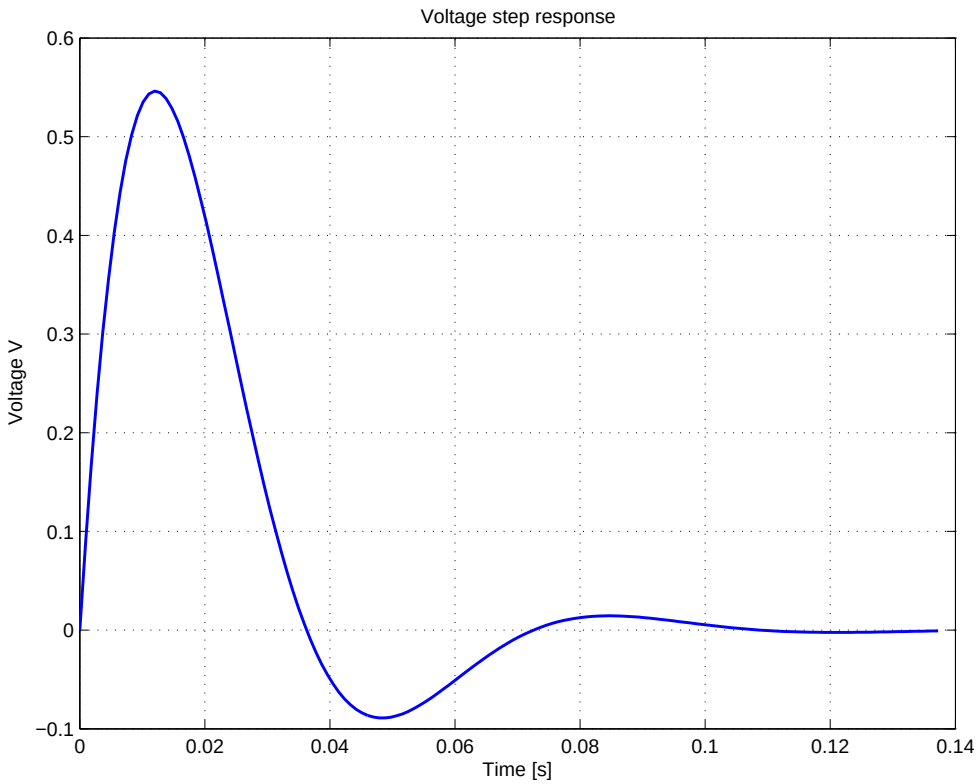
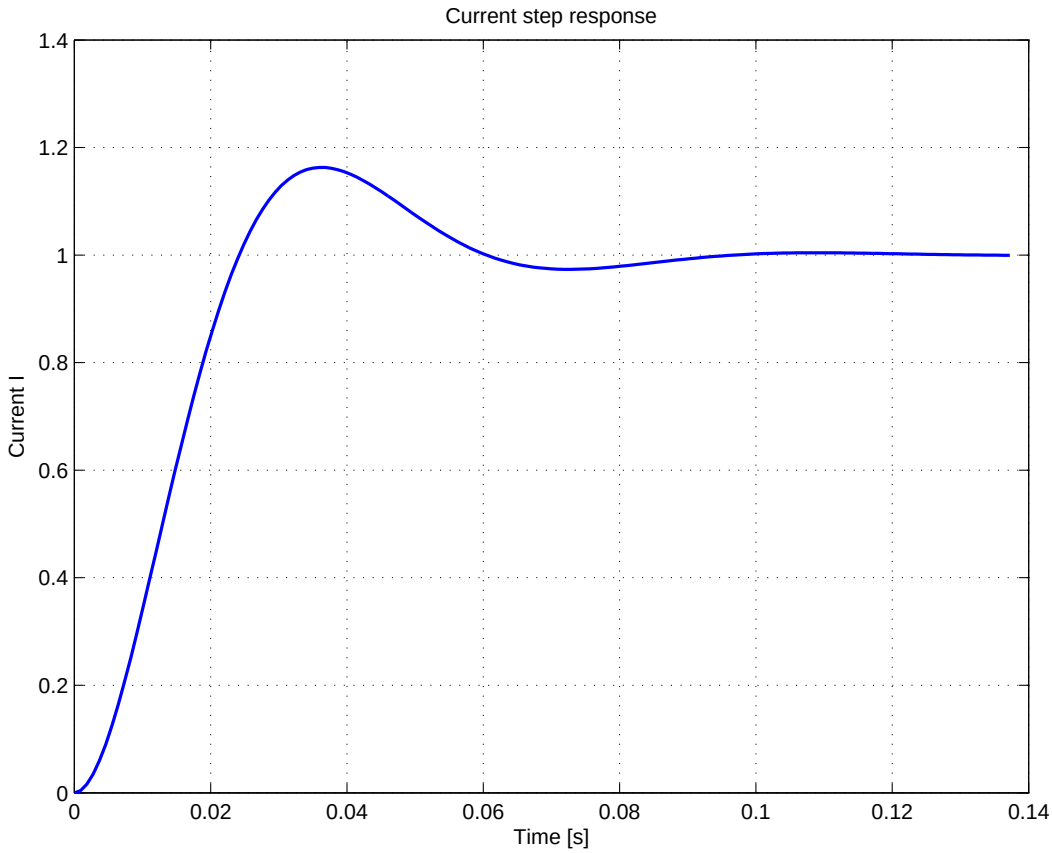
Step response $I_u = 1$ A, $V_u = 0$ V: Current I