# Example: electric network

Let us consider the following electric network:

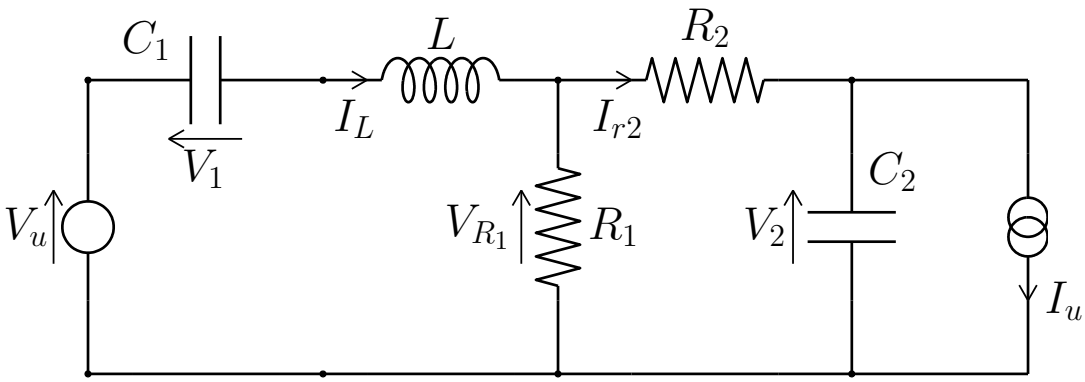


The POG scheme of the considered electric network is:

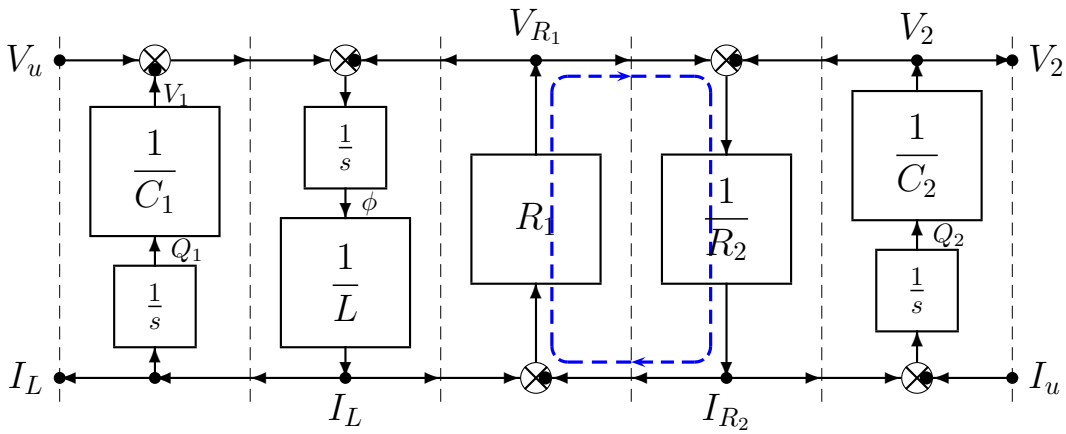


Removing the algebraic loop one obtains the following equivalent POG scheme:

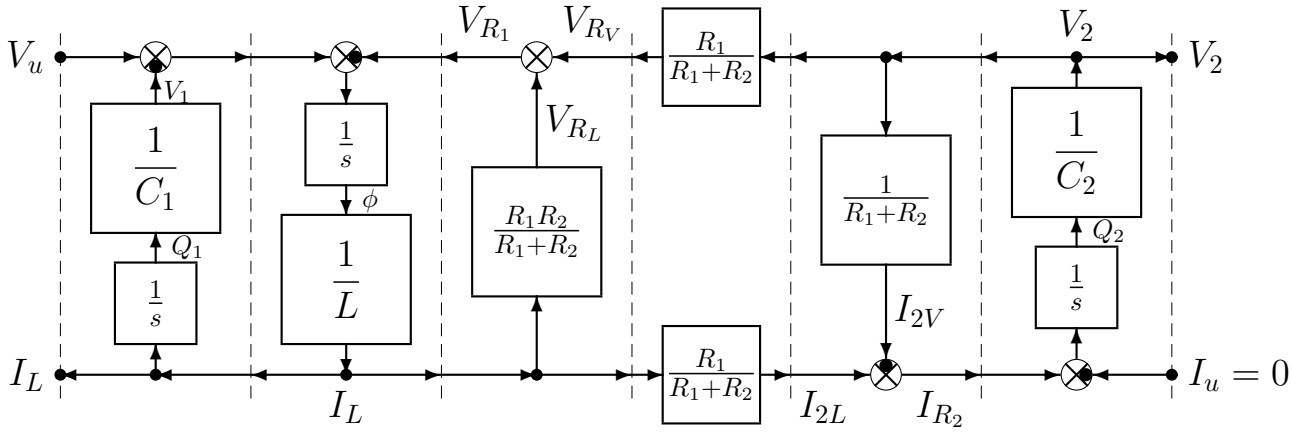


This POG block scheme of the electric network has been implemented in the Simulink environment using the following parameters R1 = 10 ohm; R2 = 10 ohm; C1 = 0.1 F; C2 = 0.3 F; L = 0.2 H.

From the POG scheme one obtains the following state space dynamic model:

$$\begin{cases} \begin{bmatrix} C_1 & 0 & 0 \\ 0 & L & 0 \\ 0 & 0 & C_2 \end{bmatrix} \begin{bmatrix} \dot{V}_1 \\ \dot{I}_L \\ \dot{V}_2 \end{bmatrix} = \begin{bmatrix} 0 & 1 & 0 \\ -1 & \frac{-R_1 R_2}{(R_1+R_2)} & \frac{-R_1}{(R_1+R_2)} \\ 0 & \frac{R_1}{(R_1+R_2)} & \frac{-1}{(R_1+R_2)} \end{bmatrix} \begin{bmatrix} V_1 \\ I_L \\ V_2 \end{bmatrix} + \begin{bmatrix} 0 \\ 1 \\ 0 \end{bmatrix} V_u \\ V_{R_1} = \begin{bmatrix} 0 & \frac{R_1 R_2}{R_1+R_2} & \frac{R_1}{R_1+R_2} \end{bmatrix} \mathbf{x} \end{cases}$$

The reachability matrix of the system is:

$$\mathcal{R}^+ = \begin{bmatrix} 0 & \frac{1}{C_1\,L} & \frac{-R_1\,R_2}{C_1\,L^2\,(R_1+R_2)} \\ \frac{1}{L} & \frac{-R_1\,R_2}{L^2\,(R_1+R_2)} & \frac{-\left(C_2\,L\,(R_1+R_2)^2\right)+C_1\,{R_1}^2\left(-L+C_2\,{R_2}^2\right)}{C_1\,C_2\,L^3\,(R_1+R_2)^2} \\ 0 & \frac{R_1}{C_2\,L\,(R_1+R_2)} & -\frac{R_1\,(L+C_2\,R_1\,R_2)}{{C_2}^2\,L^2\,(R_1+R_2)^2} \end{bmatrix}$$

The determinant of matrix $\mathcal{R}^+$ is always non zero and positive:

$$\det \mathcal{R}^+ = \frac{R_1}{C_1 C_2^2 L^3 (R_1+R_2)^2}$$

The system is reachable. The system is not reachable only if $R_1 = 0$.

- Matlab commands:

```
%%%%%%%%%%%%%%%%%%%%%%%%%%%%%%%%%%%%%%%%%%%%%%%%%%%%%%%%%%%%%%%%%%%%%%%%%%%%%%%%
syms R1 R2 C1 C2 L
Am=[     0                  1/C1                0 ;
         -1/L    -R1*R2/(L*(R1+R2)) -R1/(L*(R1+R2));
         0       R1/(C2*(R1+R2))   -1/(C2*(R1+R2)) ;
      ];
Bm=[    0;
      1/L;
        0];
Cm=[ 0  R1*R2/(R1+R2)  R1/(R1+R2) ];
R_piu=simplify([Bm Am*Bm Am*Am*Bm])
det(R_piu)
%%%%%%%%%%%%%%%%%%%%%%%%%%%%%%%%%%%%%%%%%%%%%%%%%%%%%%%%%%%%%%%%%%%%%%%%%%%%%%%%
```

```
%%%%%%%%%%%%%%%%%%%%%%%%%%%%%%%%%%%%%%%%%%%%%%%%%%%%%%%%%%%%%%%%%%%%%%
%   Rete_Elettrica_2016.m                                            %
%   Point to point control of an electric circuit                    %
%%%%%%%%%%%%%%%%%%%%%%%%%%%%%%%%%%%%%%%%%%%%%%%%%%%%%%%%%%%%%%%%%%%%%%
clear all; close all;  clc;  echo on
%%%%%%%%%%%%%%%%%%%%%%%%%%%%%%%%%%%%%%%%%%%%%%%%%%%%%%%%%%%%%%%%%%%%%%
% The International System (SI) units are used                       %
%%%%%%%%%%%%%%%%%%%%%%%%%%%%%%%%%%%%%%%%%%%%%%%%%%%%%%%%%%%%%%%%%%%%%%
A=1; ohm=1; V=1; H=1; F=1; rad=1; sec=1;
%
%%%%%%%%%%%%%%%%%%%%%%%%%%%%%%%%%%%%%%%%%%%%%%%%%%%%%%%%%%%%%%%%%%%%%%
% System parameters                                                  %
%%%%%%%%%%%%%%%%%%%%%%%%%%%%%%%%%%%%%%%%%%%%%%%%%%%%%%%%%%%%%%%%%%%%%%
R1 = 10*ohm;                      % Resistance R1
R2 = 10*ohm;                      % Resistance R2
C1 = 0.1*F;                       % Capacitance C1
C2 = 0.3*F;                       % Capacitance C2
L  = 0.2*H;                       % Inductance L
%%%%%%%%%%%%%%%%%%%%%%%%%%%%%%%%%%%%%%%%%%%%%%%%%%%%%%%%%%%%%%%%%%%%%%
% Initial conditions                                                 %
%%%%%%%%%%%%%%%%%%%%%%%%%%%%%%%%%%%%%%%%%%%%%%%%%%%%%%%%%%%%%%%%%%%%%%
V10=10*V;                         % Initial voltage of capacitor C1
IL0= 0*A;                         % Initial current of inductor L
V20=10*V;                         % Initial voltage of capacitor C2
%%%%%%%%%%%%%%%%%%%%%%%%%%%%%%%%%%%%%%%%%%%%%%%%%%%%%%%%%%%%%%%%%%%%%%
% Final conditions                                                   %
%%%%%%%%%%%%%%%%%%%%%%%%%%%%%%%%%%%%%%%%%%%%%%%%%%%%%%%%%%%%%%%%%%%%%%
V1f= 0*V;                         % Final voltage of capacitor C1
ILf=10*A;                         % Final current of inductor L
V2f= 0*V;                         % Final voltage of capacitor C2
%
echo on
pause;                            % Press any key to continue
clc
%%%%%%%%%%%%%%%%%%%%%%%%%%%%%%%%%%%%%%%%%%%%%%%%%%%%%%%%%%%%%%%%%%%%%%
% The state space matrices of the system are defined                 %
%%%%%%%%%%%%%%%%%%%%%%%%%%%%%%%%%%%%%%%%%%%%%%%%%%%%%%%%%%%%%%%%%%%%%%
Am=[     0                  1/C1               0 ;
         -1/L    -R1*R2/(L*(R1+R2)) -R1/(L*(R1+R2));
         0       R1/(C2*(R1+R2)) -1/(C2*(R1+R2)) ;
      ];
Bm=[    0;
      1/L;
        0];
Cm=[ 0  R1*R2/(R1+R2)  R1/(R1+R2) ];
%
SYS=ss(Am,Bm,Cm,0)
%
pause;                            % Press any key to continue
clc
%%%%%%%%%%%%%%%%%%%%%%%%%%%%%%%%%%%%%%%%%%%%%%%%%%%%%%%%%%%%%%%%%%%%%%
% Transfer function                                                  %
%%%%%%%%%%%%%%%%%%%%%%%%%%%%%%%%%%%%%%%%%%%%%%%%%%%%%%%%%%%%%%%%%%%%%%
GS=tf(SYS)

Transfer function:
      25 s^2 + 3.855e-015 s
---------------------------------
s^3 + 25.17 s^2 + 58.33 s + 8.333

%%%%%%%%%%%%%%%%%%%%%%%%%%%%%%%%%%%%%%%%%%%%%%%%%%%%%%%%%%%%%%%%%%%%%%
```

```
% System poles                                                          %
%%%%%%%%%%%%%%%%%%%%%%%%%%%%%%%%%%%%%%%%%%%%%%%%%%%%%%%%%%%%%%%%%%%%%%%%%%%
pole(SYS)

ans =
   -2.4117
  -22.6021
   -0.1529
%
%%%%%%%%%%%%%%%%%%%%%%%%%%%%%%%%%%%%%%%%%%%%%%%%%%%%%%%%%%%%%%%%%%%%%%%%%%%
% System zeros                                                          %
%%%%%%%%%%%%%%%%%%%%%%%%%%%%%%%%%%%%%%%%%%%%%%%%%%%%%%%%%%%%%%%%%%%%%%%%%%%
zero(SYS)
%
%%%%%%%%%%%%%%%%%%%%%%%%%%%%%%%%%%%%%%%%%%%%%%%%%%%%%%%%%%%%%%%%%%%%%%%%%%%
% Position of poles and zeros                                           %
%%%%%%%%%%%%%%%%%%%%%%%%%%%%%%%%%%%%%%%%%%%%%%%%%%%%%%%%%%%%%%%%%%%%%%%%%%%
figure(1)
pzmap(SYS)
%
pause;                            % Press any key to continue
clc
%%%%%%%%%%%%%%%%%%%%%%%%%%%%%%%%%%%%%%%%%%%%%%%%%%%%%%%%%%%%%%%%%%%%%%%%%%%
% Controllability canonical form                                        %
%%%%%%%%%%%%%%%%%%%%%%%%%%%%%%%%%%%%%%%%%%%%%%%%%%%%%%%%%%%%%%%%%%%%%%%%%%%
SYSC=canon(SYS)                   % Canonical form
%
pause;                            % Press any key to continue
clc
%%%%%%%%%%%%%%%%%%%%%%%%%%%%%%%%%%%%%%%%%%%%%%%%%%%%%%%%%%%%%%%%%%%%%%%%%%%
% Controllability matrix                                                %
%%%%%%%%%%%%%%%%%%%%%%%%%%%%%%%%%%%%%%%%%%%%%%%%%%%%%%%%%%%%%%%%%%%%%%%%%%%
ctrb(SYS)

ans =

  1.0e+003 *

         0    0.0500   -1.2500
    0.0050   -0.1250    2.8542
         0    0.0083   -0.2097
%
%%%%%%%%%%%%%%%%%%%%%%%%%%%%%%%%%%%%%%%%%%%%%%%%%%%%%%%%%%%%%%%%%%%%%%%%%%%
% Determinant of the controllability matrix                             %
%%%%%%%%%%%%%%%%%%%%%%%%%%%%%%%%%%%%%%%%%%%%%%%%%%%%%%%%%%%%%%%%%%%%%%%%%%%
%
det(ctrb(SYS))

ans =

  347.2222
%
pause;                            % Press any key to continue
clc
%%%%%%%%%%%%%%%%%%%%%%%%%%%%%%%%%%%%%%%%%%%%%%%%%%%%%%%%%%%%%%%%%%%%%%%%%%%
% Free evolution of the system                                          %
%%%%%%%%%%%%%%%%%%%%%%%%%%%%%%%%%%%%%%%%%%%%%%%%%%%%%%%%%%%%%%%%%%%%%%%%%%%
[Y,T,X] = initial(SYS,[V10 IL0 V20]);
figure(2)
subplot(311)
plot(T,X(:,1)); grid on
```

```
title('Voltage V1')
ylabel('V1 [V]')
%
subplot(312)
plot(T,X(:,2)); grid on
title('Current IL')
ylabel('IL [A]')
%
subplot(313)
plot(T,X(:,3)); grid on
title('Voltage V2')
ylabel('V2 [V]')
xlabel('Time [s]')
%
pause;                              % Press any key to continue
clc
%%%%%%%%%%%%%%%%%%%%%%%%%%%%%%%%%%%%%%%%%%%%%%%%%%%%%%%%%%%%%%%%%%%%%%
% Discrete sampled system                                            %
%%%%%%%%%%%%%%%%%%%%%%%%%%%%%%%%%%%%%%%%%%%%%%%%%%%%%%%%%%%%%%%%%%%%%%
Tsamp=0.5;                             % Sampling period
SYSD = c2d(SYS,Tsamp,'zoh');           % System discretization
[AD,BD,CD,DD] = ssdata(SYSD)           % Discrete system
%
pause;                                 % Press any key to continue
clc
%%%%%%%%%%%%%%%%%%%%%%%%%%%%%%%%%%%%%%%%%%%%%%%%%%%%%%%%%%%%%%%%%%%%%%
% Point to point control of the discrete system                      %
%%%%%%%%%%%%%%%%%%%%%%%%%%%%%%%%%%%%%%%%%%%%%%%%%%%%%%%%%%%%%%%%%%%%%%
X0=[V10; IL0; V20];                            % Initial state
Xf=[V1f; ILf; V2f];                            % Final state
u=Controllo_P2P(AD,BD,X0,Xf,3);                % Minimal norm control input
[YS,TS,XS] = LSIM(SYSD,u,[],X0)                % Simulation
%
pause;                              % Press any key to continue
%%%%%%%%%%%%%%%%%%%%%%%%%%%%%%%%%%%%%%%%%%%%%%%%%%%%%%%%%%%%%%%%%%%%%%
% Data plot                                                          %
%%%%%%%%%%%%%%%%%%%%%%%%%%%%%%%%%%%%%%%%%%%%%%%%%%%%%%%%%%%%%%%%%%%%%%
figure(3)
clf
subplot(311)
plot(TS,XS(:,1),'*'); hold on
stairs(TS,XS(:,1)); grid on
title('Voltage V1')
ylabel('V1 [V]')
%
subplot(312)
plot(TS,XS(:,2),'*'); hold on
stairs(TS,XS(:,2)); grid on
title('Current IL')
ylabel('IL [A]')
%
subplot(313)
plot(TS,XS(:,3),'*'); hold on
stairs(TS,XS(:,3)); grid on
title('Voltage V2')
ylabel('V2 [V]')
xlabel('Time [s]')
pause;                              % Press any key to continue
clc
%%%%%%%%%%%%%%%%%%%%%%%%%%%%%%%%%%%%%%%%%%%%%%%%%%%%%%%%%%%%%%%%%%%%%%
% System trajectories in the state space                             %
```

```
%%%%%%%%%%%%%%%%%%%%%%%%%%%%%%%%%%%%%%%%%%%%%%%%%%%%%%%%%%%%%%%%%%%%%%%%%%%%
figure(4); clf
figure(5); clf
for k=(3:8)
   u=Control_P2P(AD,BD,X0,Xf,k);        % Minimal norm control input
   [YS,TS,XS] = lsim(SYSD,u,[],X0);         % Simulation
   t=(0:k)*Tsamp;
   [tt,uu] = stairs(t,u);
   Ind=find(diff(tt)==0);
   tt(Ind+1)=tt(Ind+1)+0.0000001;
   tin=(0:0.0001:1)*t(end);
   uin= interp1(tt,uu,tin);
   [YSt,TSt,XSt] = lsim(SYS,uin,tin,X0,'zoh');
   %
   figure(4)
   plot3(XS(:,1),XS(:,2),XS(:,3)); hold on
   plot3(XS(:,1),XS(:,2),XS(:,3),'*');
   plot3(XSt(:,1),XSt(:,2),XSt(:,3),'r');
   figure(5)
   [XX,YY]=stairs(TS,u);
   plot3(ones(size(XX))*k,XX,YY); hold on
   echo off
end
echo on
figure(4)
plot3(X0(1),X0(2),X0(3),'*r');
plot3(Xf(1),Xf(2),Xf(3),'*r');
title('Trajectories in the state space')
xlabel('Voltage V1 [V]')
ylabel('Current IL [A]')
zlabel('Voltage V2 [V]')
grid on
figure(5)
grid on
title('Control variable')
ylabel('u(t) [V]')
xlabel('Time [s]')
%%%%%%%%%%%%%%%%%%%%%%%%%%%%%%%%%%%%%%%%%%%%%%%%%%%%%%%%%%%%%%%%%%%%%%%%%%%%
```

## Function Control_P2P(AD,BD,X0,Xf,np):

```
%%%%%%%%%%%%%%%%%%%%%%%%%%%%%%%%%%%%%%%%%%%%%%%%%%%%%%%%%%%%%%%%%%%%%%%%%%%%
% Provides the minimum norm control action which stirs the system
% from the initial state X0 to the final state Xf, in "np" steps.
% The system  AD and BD is supposed to be discrete and reachable
%
function u=Control_P2P(AD,BD,X0,Xf,np)
%
Rpiu=MatRagK(AD,BD,np);                          % Reachability matrix
u=Rpiu'*inv(Rpiu*Rpiu')*(Xf-(AD^np)*X0);         % Minimum norm control action
u=[fliplr(u') 0];
return
%%%%%%%%%%%%%%%%%%%%%%%%%%%%%%%%%%%%%%%%%%%%%%%%%%%%%%%%%%%%%%%%%%%%%%%%%%%%
```

# Function MatRagK(AD,BD,np):

```
%%%%%%%%%%%%%%%%%%%%%%%%%%%%%%%%%%%%%%%%%%%%%%%%%%%%%%%%%%%%%%%%%%%%%%
% Rp=MatRagK(A,B,k)
%
% Compute the reachability matrix of system (A,B) in k steps:
%
%   Rp = [B A*B A*A*B ... A^(k-1)*B]
%
function Rp=MatRagK(A,B,k)
[nra,nca]=size(A);              % Nr. of rows and columns
[nrb,ncb]=size(B);              % of matrices A and B
if (nra==nca)&(nca==nrb)
   Rp=B;
   for n=[1:k-1]
      Rp=[Rp (A^n)*B];
   end
else
   help MatRagK
   disp('Error: matrix A is not squared or it is not compatible with B')
end
return
%%%%%%%%%%%%%%%%%%%%%%%%%%%%%%%%%%%%%%%%%%%%%%%%%%%%%%%%%%%%%%%%%%%%%%
```

- Free evolution:

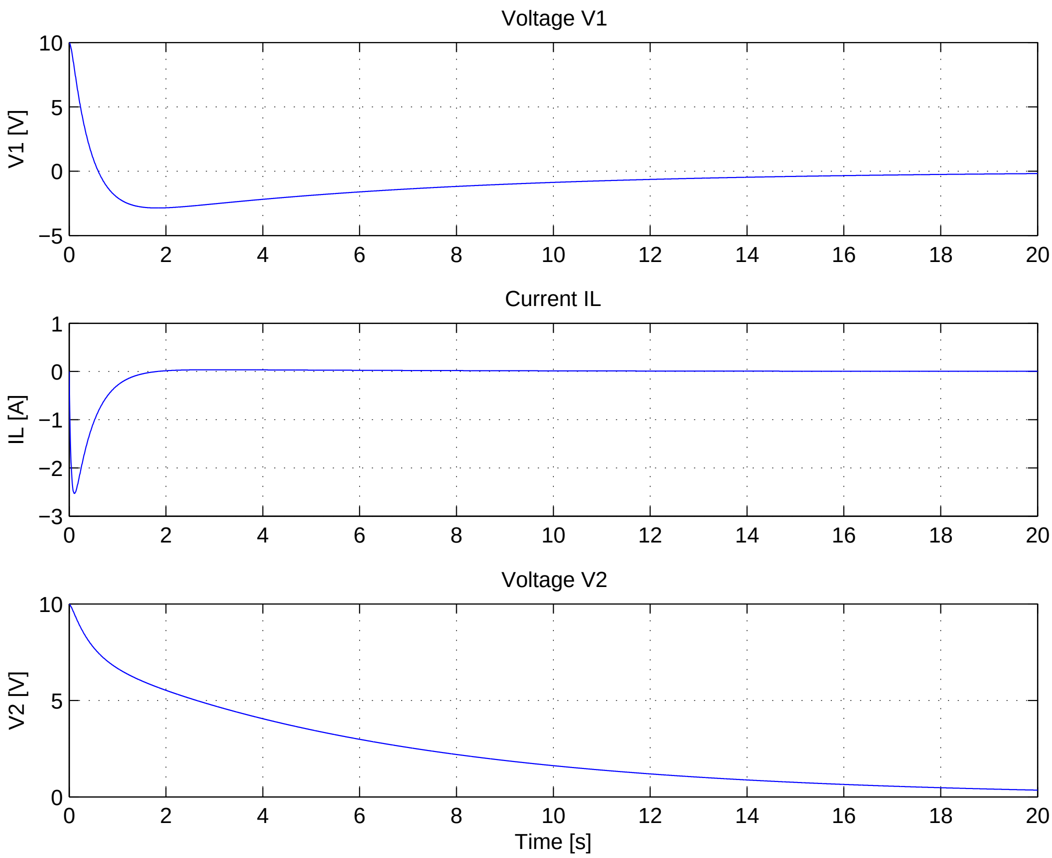

- State space trajectories:

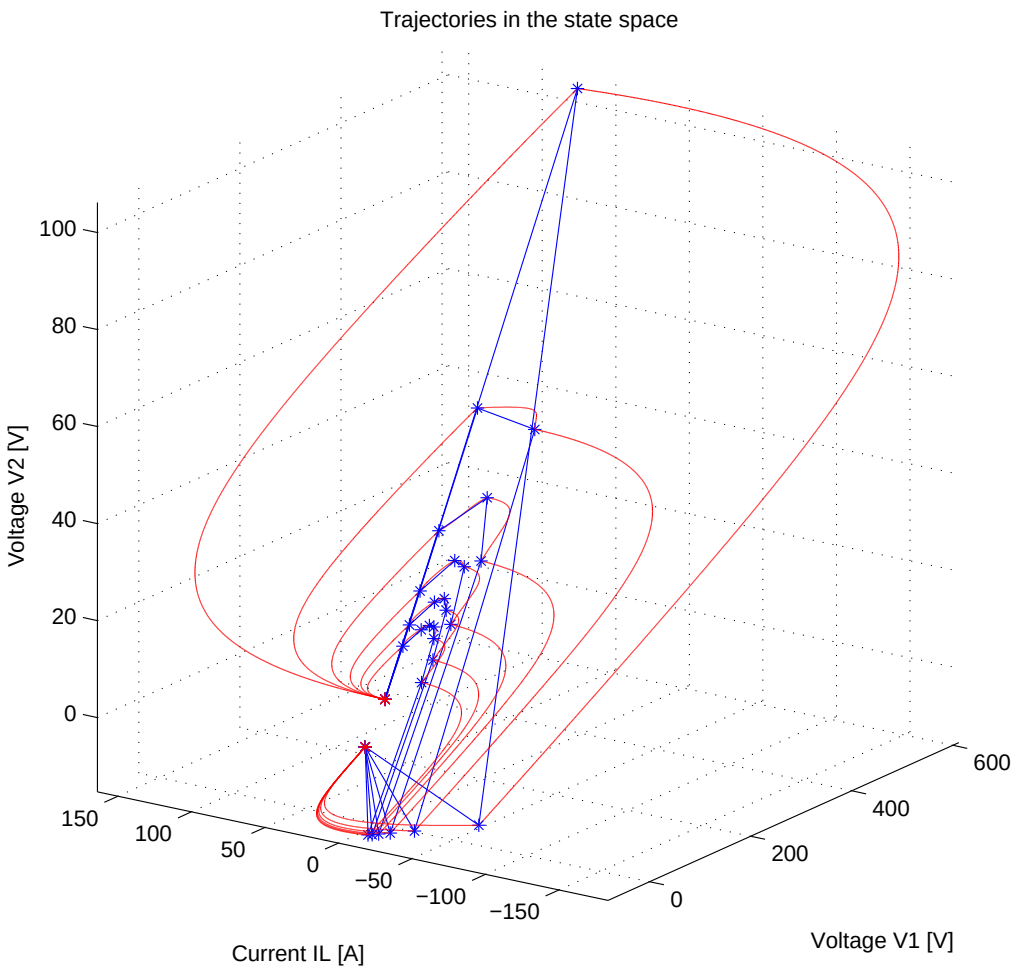

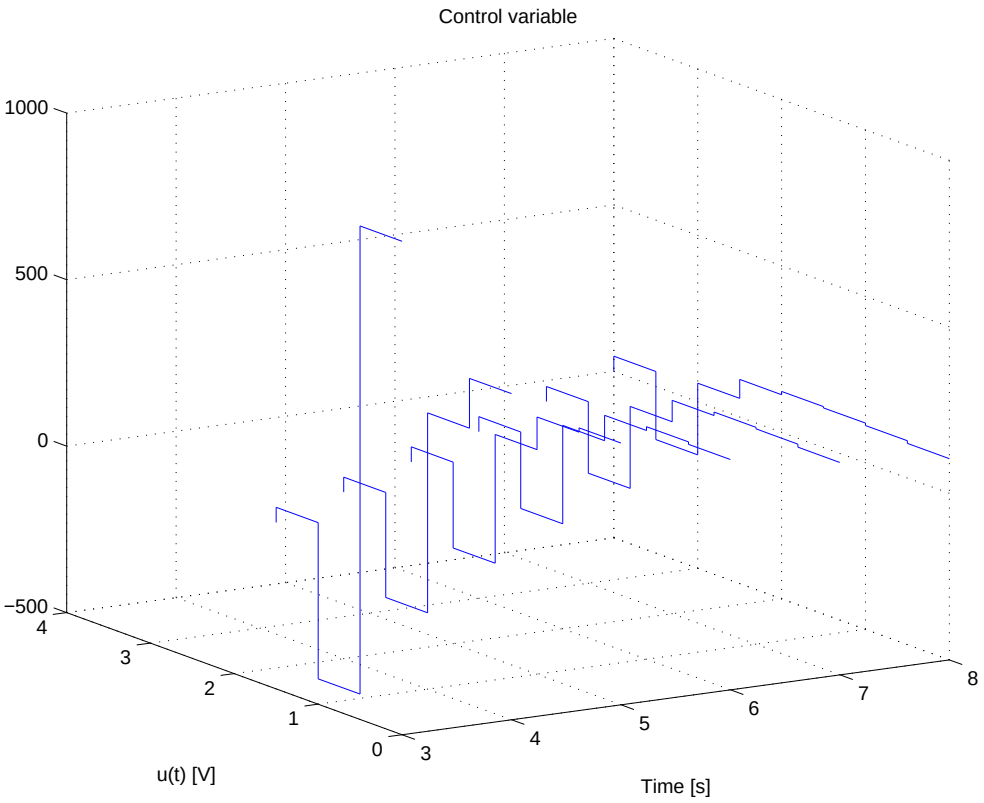
- Control signals $u(k)$: