Dynamic modeling of physical systems

- The main energetic domains encountered in modeling physical systems are:
  - mechanic (translational and rotational)
  - electromagnetic
  - hydraulic
  - thermic ($\simeq$)
- These domains are quite different, but they have a very similar dynamic structure. In fact, each energetic domains is mainly characterized by:
  - **2 "dynamic" elements $\mathcal{D}_1$ and $\mathcal{D}_2$** which store the energy (i.e. capacitors, inductors, masses, springs, etc.);
  - **1 "static" element $\mathcal{R}$** which dissipates (or generates) the energy(i.e. resistors, frictions, etc.);
  - **2 "energy" variables $q_1(t)$ and $q_2(t)$** which define how much energy is stored within the dynamic elements;
  - **2 "power" variables $v_1(t)$ and $v_2(t)$**which describe how the energy moves within the system;
- The product $p(t) = v_1(t)v_2(t)$ has the physical meaning of "power" flowing through the physical section"" characterized by the two power variables $v_1(t)$ and $v_2(t)$.
- The two dynamic elements $\mathcal{D}_1$ and $\mathcal{D}_2$ are "dual": their differential equations have the same structure and only differ in a reversal of the subscripts "1" e "2".

- The dynamic element $\mathcal{D}_1$ is characterized by:

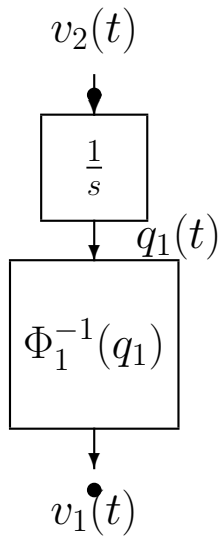

1) the internal variable $q_1(t)$;
2) the input variable $v_2(t)$;
3) the output variable $v_1(t)$;
4) the *constitutive relation* $\Phi_1(v_1)$ which links the internal variable q_1 to the output variable v_1:

$$q_1 = \Phi_1(v_1) \qquad \leftrightarrow \qquad v_1 = \Phi_1^{-1}(q_1)$$

5) a differential equation which links the internal variable q_1 to the input variable v_2:

$$\frac{dq_1}{dt} = v_2 \qquad \leftrightarrow \qquad dq_1 = v_2\, dt$$

6) the stored energy $E_1(q_1)$ is a function only of the internal energy variable q_1:

$$E_1 = \int_0^t p(t)\, dt = \int_0^t v_1\, v_2\, dt = \int_0^{q_1} \Phi_1^{-1}(q_1)\, dq_1 = E_1(q_1)$$

- The input and output power flows of the dynamic element $\mathcal{D}_1$ can be clearly shown using one of the two following graphical representations:

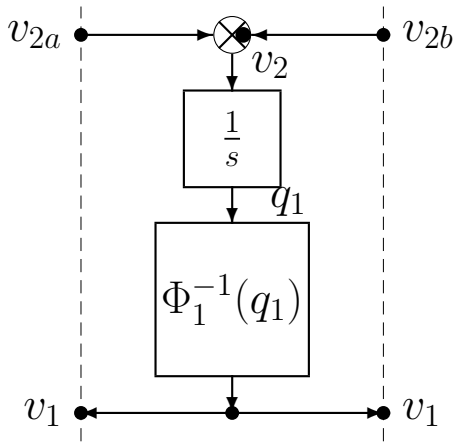

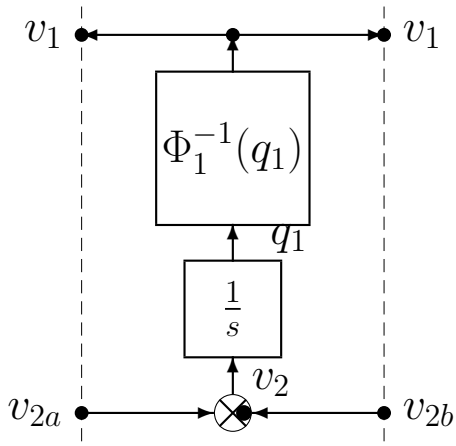

In this case the entering power is $p_e(t) = v_{2a}\, v_1$ and the exiting power is $p_u(t) = v_{2b}\, v_1$.

- The dynamic element $\mathcal{D}_2$ is characterized by:

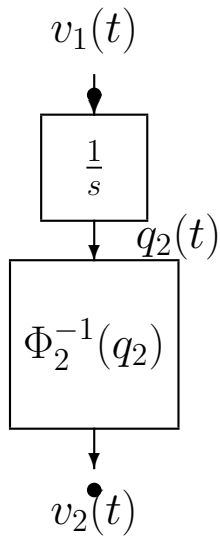

1) the internal variable $q_2(t)$;
2) the input variable $v_1(t)$;
3) the output variable $v_2(t)$;
4) the *constitutive relation* $\Phi_2(v_2)$ which links the internal variable q_2 to the output variable v_2:

$$q_2 = \Phi_2(v_2) \qquad \leftrightarrow \qquad v_2 = \Phi_2^{-1}(q_2)$$

5) a differential equation which links the internal variable q_2 to the input variable v_1:

$$\frac{dq_2}{dt} = v_1 \qquad \leftrightarrow \qquad dq_2 = v_1\, dt$$

6) the stored energy $E_2(q_2)$ is a function only of the internal energy variable q_1:

$$E_2 = \int_0^t p(t)\, dt = \int_0^t v_1\, v_2\, dt = \int_0^{q_2} \Phi_2^{-1}(q_2)\, dq_2 = E_2(q_2)$$

- The input and output power flows of the dynamic element $\mathcal{D}_2$ can be clearly shown using one of the two following graphical representations:

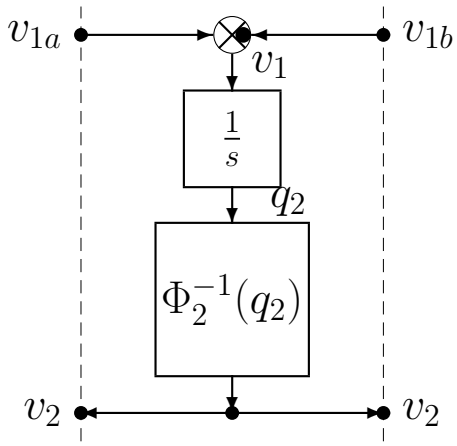

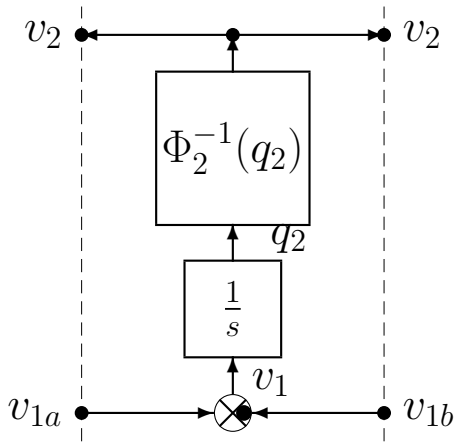

In this case the entering power is $p_e(t) = v_{1a}\, v_2$ and the exiting power is $p_u(t) = v_{1b}\, v_2$.

- The static element $\mathcal{R}$ is characterized only by a *constitutive relation* Φ_R that links the two power variables v_1 and v_2:

$$v_1 = \Phi_R(v_2) \qquad \leftrightarrow \qquad v_2 = \Phi_G(v_1)$$

The functions $\Phi_R(\cdot)$ and $\Phi_G(\cdot)$ are one the inverse of the other:

$$\Phi_G(v_1) = \Phi_R^{-1}(v_1) \qquad \leftrightarrow \qquad \Phi_R(v_2) = \Phi_G^{-1}(v_2)$$

This element can be oriented in both ways:

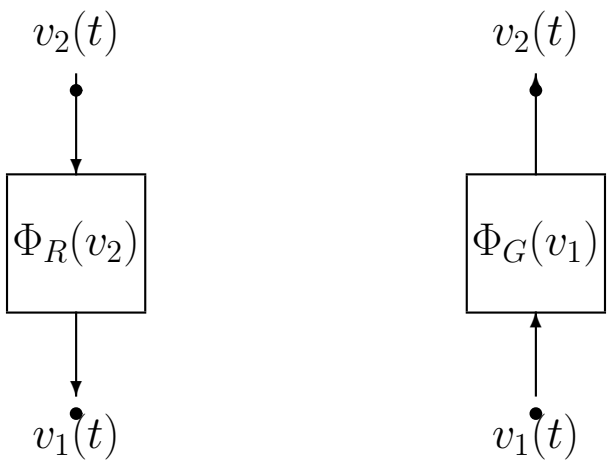

- The input and output power flows of the static element $\mathcal{R}$ can be clearly shown using one of the two following graphical representations:

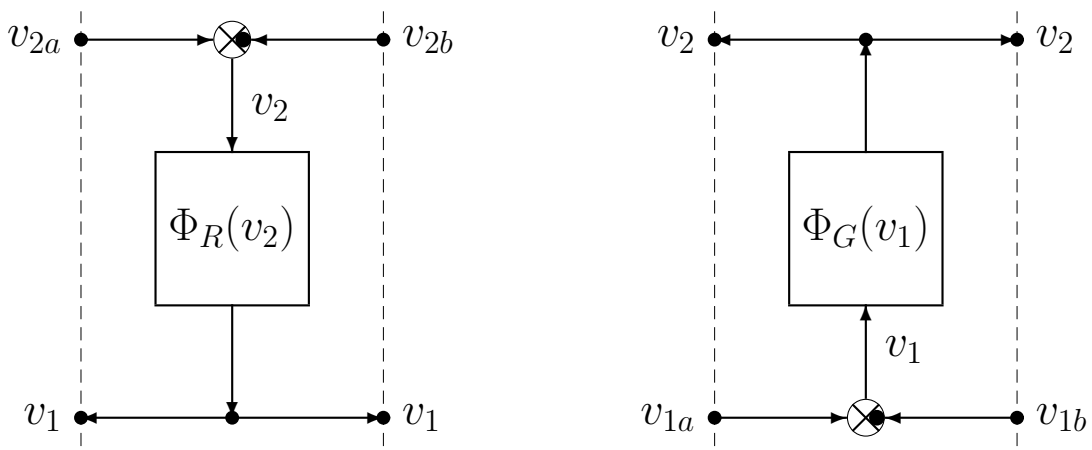

- The power $p(t)$ dissipated (or generated) by the static element $\mathcal{R}$ is equal to the product of the two power variables:

$$p(t) = v_1(t)v_2(t) = \Phi_R(v_2)\, v_2 = v_1\, \Phi_R^{-1}(v_1)$$

- **Electromagnetic** domain:

	Name	Constitutive Rel.	Linear case	Differentioal Eq.
$\mathcal{D}_1$ q_1 v_1	C Capacitor Q Charge V Voltage	$Q = \Phi_C(V)$	$Q = C\,V$	$\dfrac{d\,Q}{dt} = I$
$\mathcal{D}_2$ q_2 v_2	L Inductor ϕ Flux I Current	$\phi = \Phi_L(I)$	$\phi = L\,I$	$\dfrac{d\,\phi}{dt} = V$
$\mathcal{R}$	R Resistance	$V = \Phi_R(I)$	$V = R\,I$	

Linear dynamic elements

- Inductor ($\phi = L\,I$):

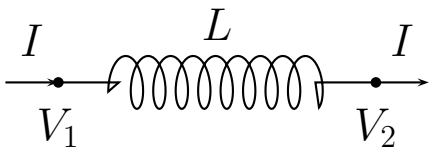

$$\frac{d}{dt}\,[L\,I] = V_1 - V_2$$

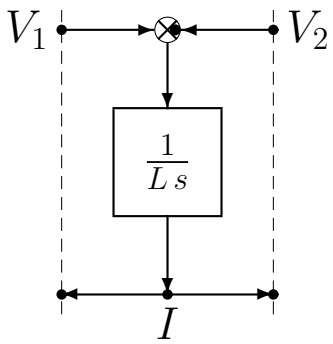

- Capacitor ($Q = C\,V$):

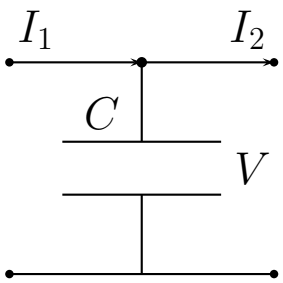

$$\frac{d}{dt}\,[C\,V] = I_1 - I_2$$

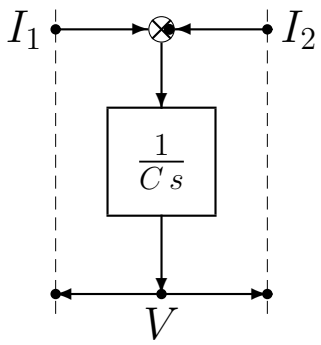

- **<u>Mechanic Translational</u>** domain:

		Name	Constitutive Rel.	Linear case	Differentioal Eq.
$\mathcal{D}_1$	M	Mass	$P = \Phi_M(\dot{x})$	$P = M\,\dot{x}$	$\dfrac{d\,P}{dt} = F$
q_1	P	Momentum			
v_1	$\dot{x}$	Velocity			
$\mathcal{D}_2$	E	String	$x = \Phi_E(F)$	$x = E\,F$	$\dfrac{d\,x}{dt} = \dot{x}$
q_2	x	Displacement			
v_2	F	Force			
$\mathcal{R}$	b	Friction	$F = \Phi_b(\dot{x})$	$F = b\,\dot{x}$	

- **<u>Mechanic Rotational</u>** domain:

		Name	Constitutive Rel.	Linear case	Differentioal Eq.
$\mathcal{D}_1$	J	Inertia	$P = \Phi_J(\omega)$	$P = J\,\omega$	$\dfrac{d\,P}{dt} = \tau$
q_1	P	Ang. Momentum			
v_1	ω	Ang. Velocity			
$\mathcal{D}_2$	E	Rot. Spring	$\theta = \Phi_E(\tau)$	$\theta = E\,\tau$	$\dfrac{d\,\theta}{dt} = \omega$
q_2	θ	Ang. Displacement			
v_2	τ	Torque			
$\mathcal{R}$	b	Rot. Friction	$\tau = \Phi_b(\omega)$	$\tau = b\,\omega$	

- **Hydraulic** domain:

	Name	Constitutive Rel.	Linear case	Differentioal Eq.
$\mathcal{D}_1$ q_1 v_1	C_I Hyd. Capacitor V Volume P Pressure	$V = \Phi_C(P)$	$V = C_I\, P$	$\dfrac{d\,V}{dt} = Q$
$\mathcal{D}_2$ q_2 v_2	L_I Hyd. Inductor ϕ_I Hyd. Flux Q Volume flow rate	$\phi_I = \Phi_L(Q)$	$\phi_I = L_I\, Q$	$\dfrac{d\,\phi_I}{dt} = P$
$\mathcal{R}$	R Hyd. Resistor	$P = \Phi_R(Q)$	$P = R_I\, Q$	

- Hydraulic Inductor:

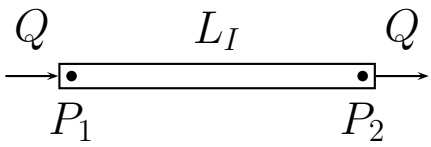

$$\frac{d}{dt}\left[L_I Q\right] = P_1 - P_2$$

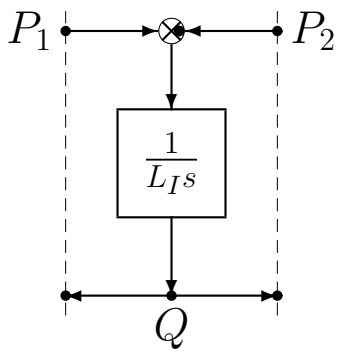

- Hydraulic Capacitor:

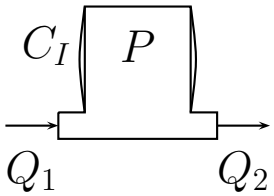

$$\frac{d}{dt}\left[C_I P\right] = Q_1 - Q_2$$

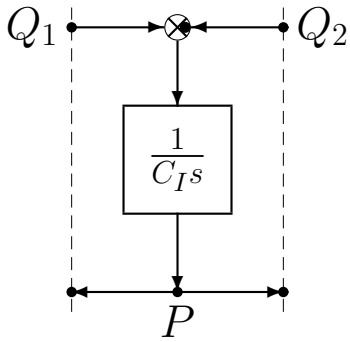

- Hydraulic Resistance:

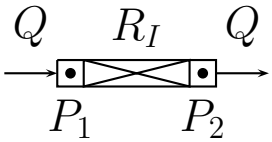

$$P_1 - P_2 = R_I Q$$

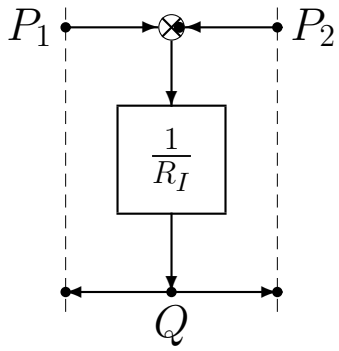

Examples

- Mass-dumper system.

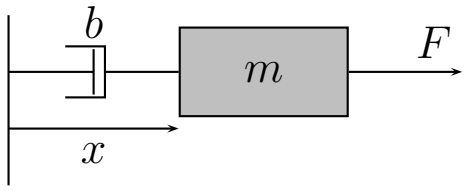

Differential equation:

$$\frac{d(m\dot{x})}{d\,t} = F - b\,\dot{x}$$

Using the Laplace transform:

$$\dot{X}(s) = \frac{1}{m\,s + b}\,F(s)$$

one obtains the transfer function:

$$G(s) = \frac{1}{m\,s + b}$$

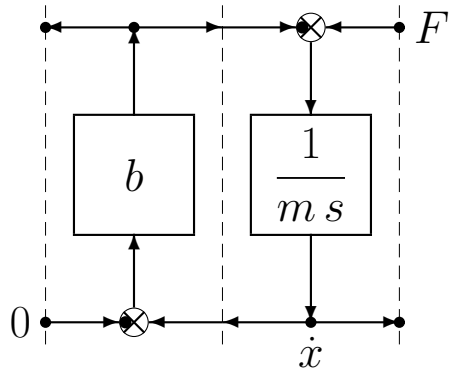

- Parallel spring-dumper system:

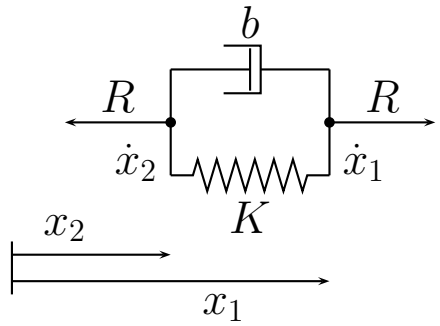

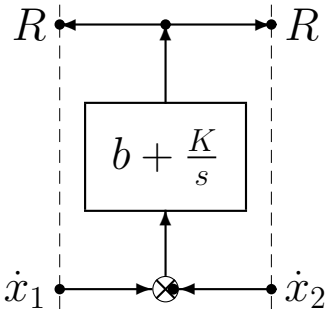
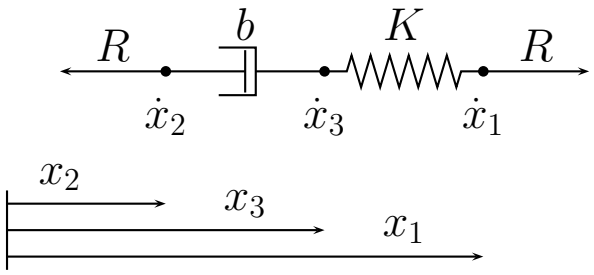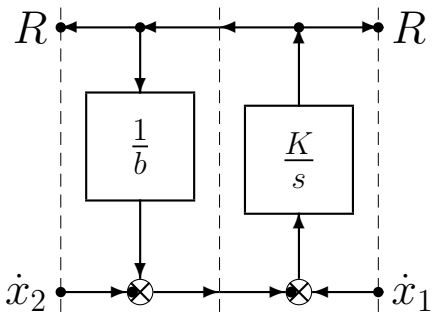
- Series spring-dumper system: