Bandwidth

The time behavior of the module Bode diagram of a feedback system $G_0(s)$ is usually similar to that of a second-order system, due to the presence of two dominant complex conjugates poles:

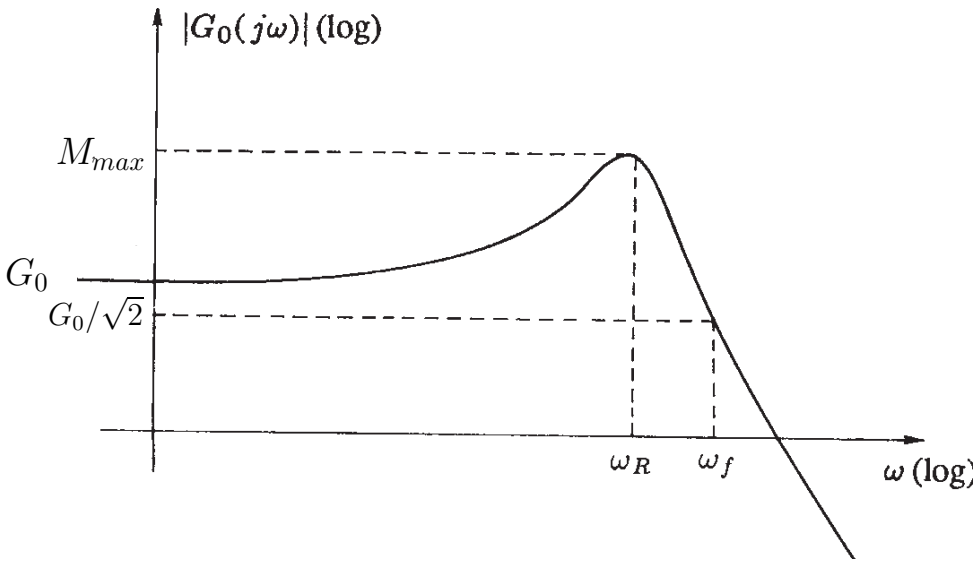

The frequency parameters that characterize this frequency response are:

1. *Resonance frequency* ω_R: the frequency where the module of function $G_0(j\omega)$ is maximum;

2. *Resonance peak* M_R: the ratio between the maximum module M_{max} of function $G_0(j\omega)$ and the static gain $G_0 = G_0(0)$: $M_R = M_{max}/G_0$;

3. *Bandwidth* ω_f: the frequency where the module of function $G_0(j\omega)$ is equal to $G_0/\sqrt{2}$, that is 3 db less than the static gain G_0.

The bandwidth ω_f of a system provides a qualitative definition of the filtering capabilities of the system, and provides also a qualitative measure of the rise time T_s of the a step response of the system.

The qualitative relation between bandwidth ω_f and rise time T_s is:

$$T_s \propto \frac{1}{\omega_f}$$

that is, the rise time T_s is proportional to the inverse of bandwidth ω_f.

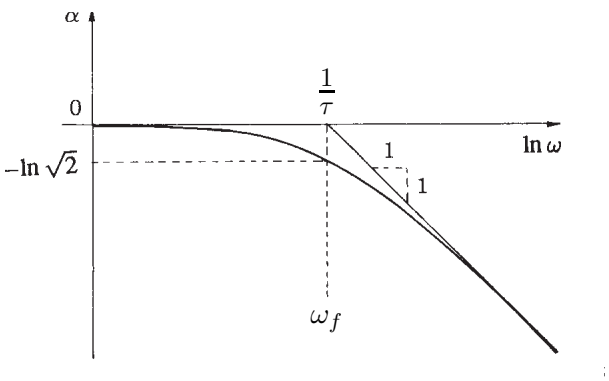

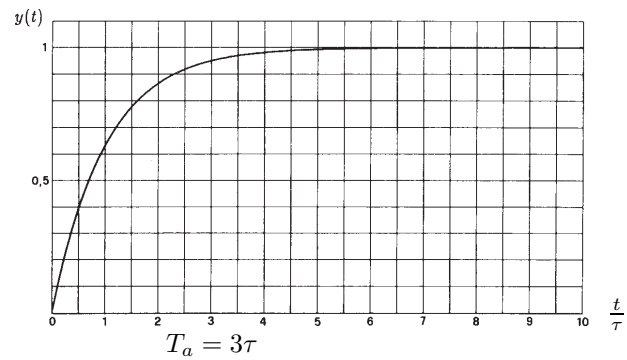

For first-order systems the relation is evident: the rise time T_s is proportional to time constant τ while bandwidth $\omega_f = \frac{1}{\tau}$ is inversely proportional to τ. It can be shown that relation $T_s \propto 1/\omega_f$ holds also for high order systems.

In feedback systems with high loop gain, i.e. $H(s)G(s) \gg 1$, the bandwidth ω_{f0} of feedback system $G_0(s)$ can be easily obtained (in an approximate way) from the module Bode diagram of function $H(s)G(s)$.

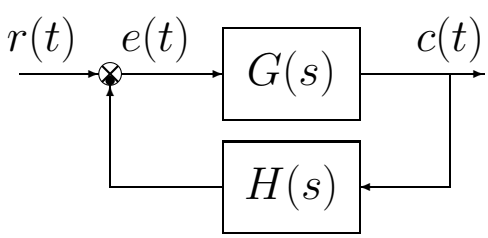

$$G_0(s) = \frac{G(s)}{1 + H(s)G(s)}$$

Let us suppose, for example, that $H(s) = 1$. In this case, it follows that:

$$G_0(j\omega) = \frac{G(j\omega)}{1 + G(j\omega)} \simeq \begin{cases} 1 & \text{if} \quad |G(j\omega)| \gg 1 \\ G(j\omega) & \text{if} \quad |G(j\omega)| \ll 1 \end{cases}$$

If $G(j\omega) \simeq G_0 \gg 1$ when $\omega < \omega_f$, the frequency response of function $G_0(j\omega)$ remains almost constant, equal to 1, for all the frequencies ω that belong ro the bandwidth: $\omega < \omega_f$.

Amplitude Bode diagrams of functions , $G(s)$ and $G_0(s)$:

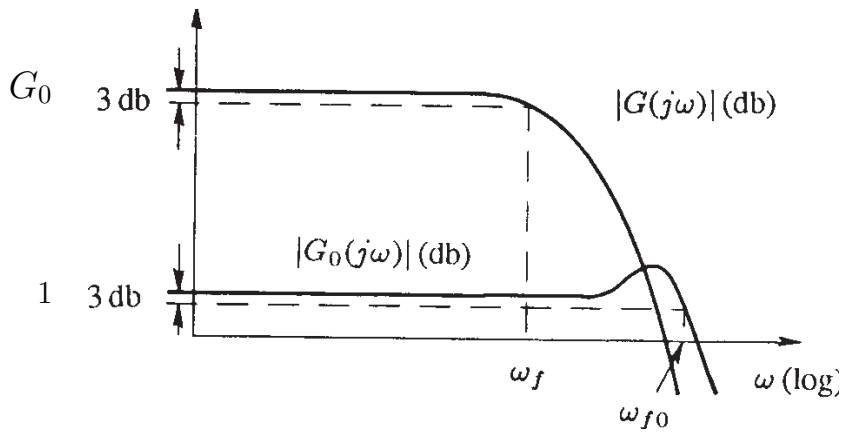

Numeric example:

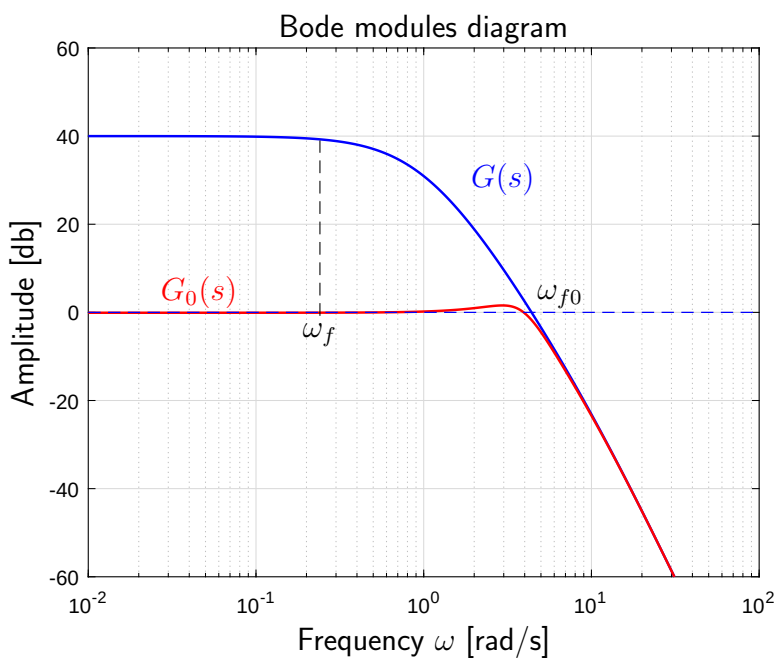

$$G(s) = \frac{1000}{(s+1)^3(s+10)}$$

$$G_0(s) = \frac{G(s)}{1 + G(s)}$$

The bandwidth of the feedback system (from 0 to ω_{f0}) is greater than that of the open loop system (from 0 to ω_f).

The bandwidth ω_{f0} of a feedback system can be easily obtained from the Nyquist diagram:

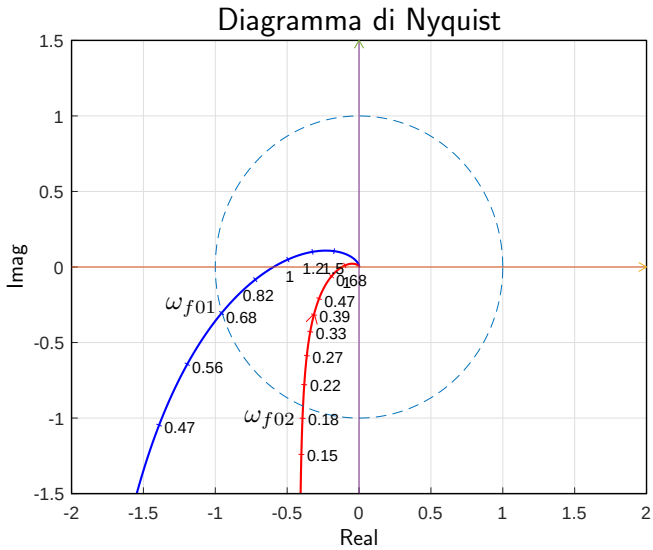

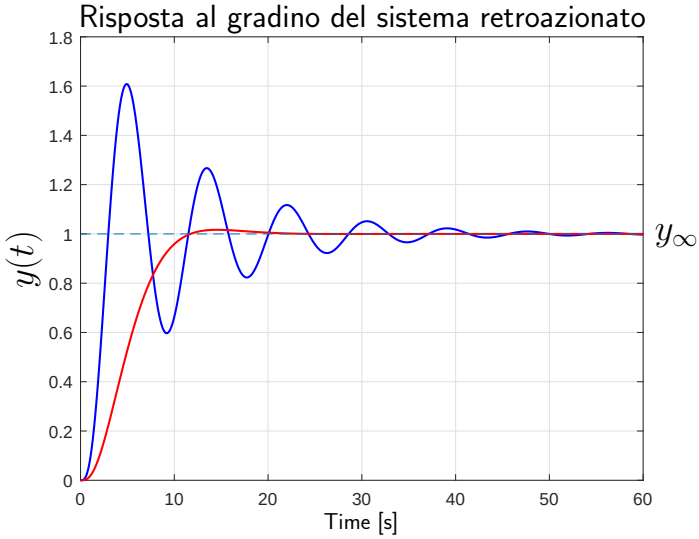

In the figure are shown the Nyquist diagrams of the following two systems:

$$G_1(s) = \frac{10}{s(s+1)^2(s+10)}, \qquad G_2(s) = \frac{2}{s(s+1)^2(s+10)}$$

Next to the Nyquist diagrams are shown the time behaviors of the step response of the corresponding feedback systems. In both cases the rise time ($T_{s1} \simeq 1.7$ and $T_{s2} \simeq 7$ s) is "inversely proportional" to the bandwidth of the two feedback systems ($\omega_{f01} \simeq 0.68$ and $\omega_{f02} \simeq 0.19$).

From the Nyquist diagrams, the bandwidths of the two feedback systems can be easily read:

$$\omega_{f01} \simeq 0.68, \qquad \omega_{f02} \simeq 0.19.$$

From the step responses of the two feedback systems, the rise times of the two feedback systems can be easily read:

$$T_{s1} \simeq 1.7, \qquad T_{s2} \simeq 7.$$

It can be seen numerically that the rise time of each system is, in an "approximate" way, inversely proportional to the bandwidth of the corresponding retracted system:

$$T_{s1} \simeq 1.7 \propto \frac{1}{\omega_{f01}} \simeq 1.47, \qquad T_{s2} \simeq 7 \propto \frac{1}{\omega_{f02}} \simeq 5.3.$$