General properties of feedback systems

- Feedback system and its minimal form:

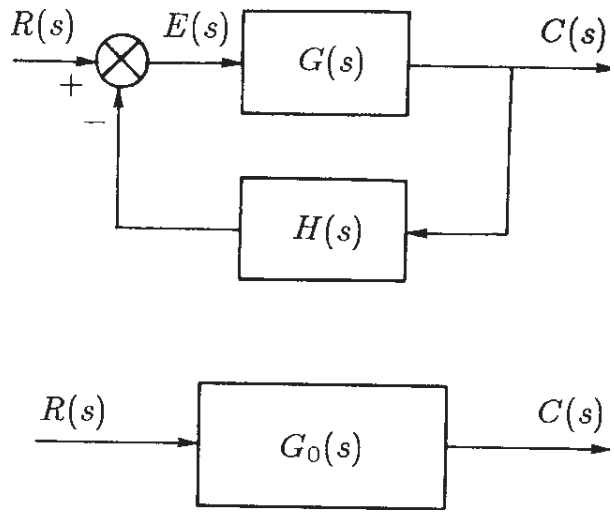

- Meaning of the symbols:

  $r(t)$: *reference signal (or "set point")* ;

  $c(t)$: *controlled variable*;

  $e(t)$: *error signal*;

  $G(s)$: *direct path transfer function*;

  $H(s)$: *feedback path transfer function*;

  $G(s)\,H(s)$: *ring gain.*

- Transfer function of the feedback system:

$$G_0(s) = \frac{C(s)}{R(s)} = \frac{G(s)}{1 + G(s)\,H(s)}$$

- This transfer function describes the feedback system in the absence of disturbances and parametric variations.

Sensitivity to parameter variation

- Let α be a parameter of the transfer function $G(s)$ and let $\Delta\alpha$ be a small variation with respect to the nominal value α_0: $\alpha = \alpha_0 + \Delta\alpha$. Let $G(s) = G(s, \alpha_0)$ be the "nominal" transfer function. The transfer function $G(s, \alpha)$ can be written, as a first approximation, as follows:

$$G(s, \alpha) = G(s, \alpha_0 + \Delta\alpha) = G(s) + \Delta G(s)$$

where

$$\Delta G(s) = \left.\frac{\partial G}{\partial \alpha}\right|_{\alpha=\alpha_0} \Delta\alpha$$

- Let $X(s)$ be the transfer function of the input signal. The variation $\Delta\alpha$ of parameter $\alpha = \alpha_0 + \Delta\alpha$ leads to a variation $\Delta Y(s)$ of the output function $Y(s)$ which can be expressed as follows $\Delta Y(s) = \Delta G(s)\, X(s)$.

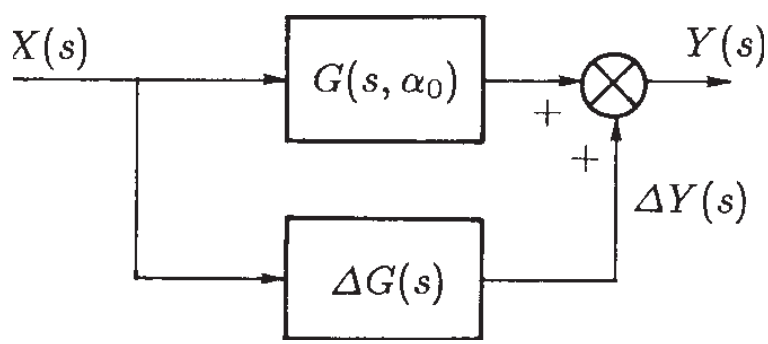

- In feedback systems, a parameter variation $\Delta\alpha$ in the direct path transfer function $G(s)$ generally results in a very small change of the overall transfer function $G_0(s)$.

- A parameter variation $\Delta\beta$ in the feedback path transfer function $H(s)$ results in a change of the same order in the overall transfer function $G_0(s)$.

- The variation $\Delta G_0(s)$ of the overall transfer function $G_0(s)$ when a variation $\Delta\alpha$ of parameter α is present in the direct path transfer function $G(s)$ can be expressed as follows:

$$\Delta G_0(s) = \left.\frac{\partial G_0}{\partial \alpha}\right|_{\alpha=\alpha_0} \Delta\alpha = \frac{\partial G_0}{\partial G} \underbrace{\left.\frac{\partial G}{\partial \alpha}\right|_{\alpha=\alpha_0} \Delta\alpha}_{\Delta G(s)} = \frac{\partial G_0}{\partial G}\, \Delta G(s)$$

$$= \frac{\partial}{\partial G}\left(\frac{G}{1+G\,H}\right) \Delta G(s) = \frac{1+G\,H-G\,H}{(1+G\,H)^2}\, \Delta G(s)$$

$$= \frac{G}{(1+G\,H)^2}\, \frac{\Delta G(s)}{G(s)} = \frac{G_0(s)}{1+G(s)\,H(s)}\, \frac{\Delta G(s)}{G(s)}$$

- The following relation holds:

$$\boxed{\frac{\Delta G_0(s)}{G_0(s)} = \frac{1}{1+G(s)\,H(s)}\, \frac{\Delta G(s)}{G(s)}}$$

- For all the frequencies for which

$$|G(j\omega)\,H(j\omega)| \gg 1\ ,$$

the relative errors of functions $G_0(s)$ and $G_0(s)$ satisfy the relation

$$\frac{|\Delta G_0(j\omega)|}{|G_0(j\omega)|} \ll \frac{|\Delta G(j\omega)|}{|G(j\omega)|}$$

- For the frequencies for which the ring gain is sufficiently high, the relative error due to the variation of a parameter α within function $G(s)$ is much lower in the feedback system than in the open loop system.

- On the contrary, for variations $\Delta\beta$ of a parameter β in $H(s,\beta)$ we have:

$$\boxed{\frac{\Delta G_0(s)}{G_0(s)} = \frac{-G(s)\,H(s)}{1+G(s)\,H(s)}\, \frac{\Delta H(s)}{H(s)}}$$

that is, the relative errors are of the same order of magnitude:

$$\frac{|\Delta G_0(j\omega)|}{|G_0(j\omega)|} \simeq \frac{|\Delta H(j\omega)|}{|H(j\omega)|}$$

Sensitivity to disturbances

- Let $d(t)$ be a disturbance acting on the direct path of a feedback system:

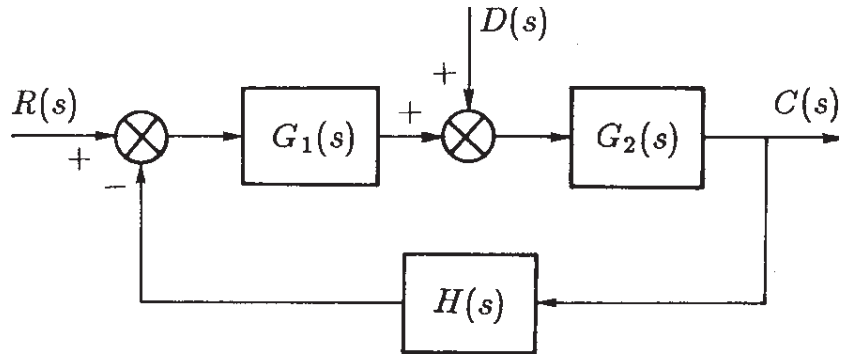

- In absence and in the presence of feedback function $H(s)$, the output variations $\Delta C_d(s)$ due to the disturbance $D(s)$ are the following:

$$\Delta C'_d(s) = G_2(s)\, D(s) \ ,$$

$$\Delta C''_d(s) = \frac{G_2(s)}{1 + G(s)\, H(s)}\, D(s) \quad \text{where} \quad G(s) = G_1(s)\, G_2(s).$$

- Therefore, in the presence of feedback function $H(s)$ the the output variations $\Delta C''_d(s)$ is reduced by a factor of $|1 + G(j\omega)\, H(j\omega)|$ for all the frequencies for which:

$$|G(j\omega)\, H(j\omega)| \gg 1$$

- The feedback systems are therefore robust both to parametric variations $\Delta\alpha$ and to the presence of external disturbances $D(s)$ if the ring gain $|G(j\omega)\, H(j\omega)|$ of the feedback system is high at the frequencies ω where the disturbance acts.

Example. Refer to the following Simulink diagram:

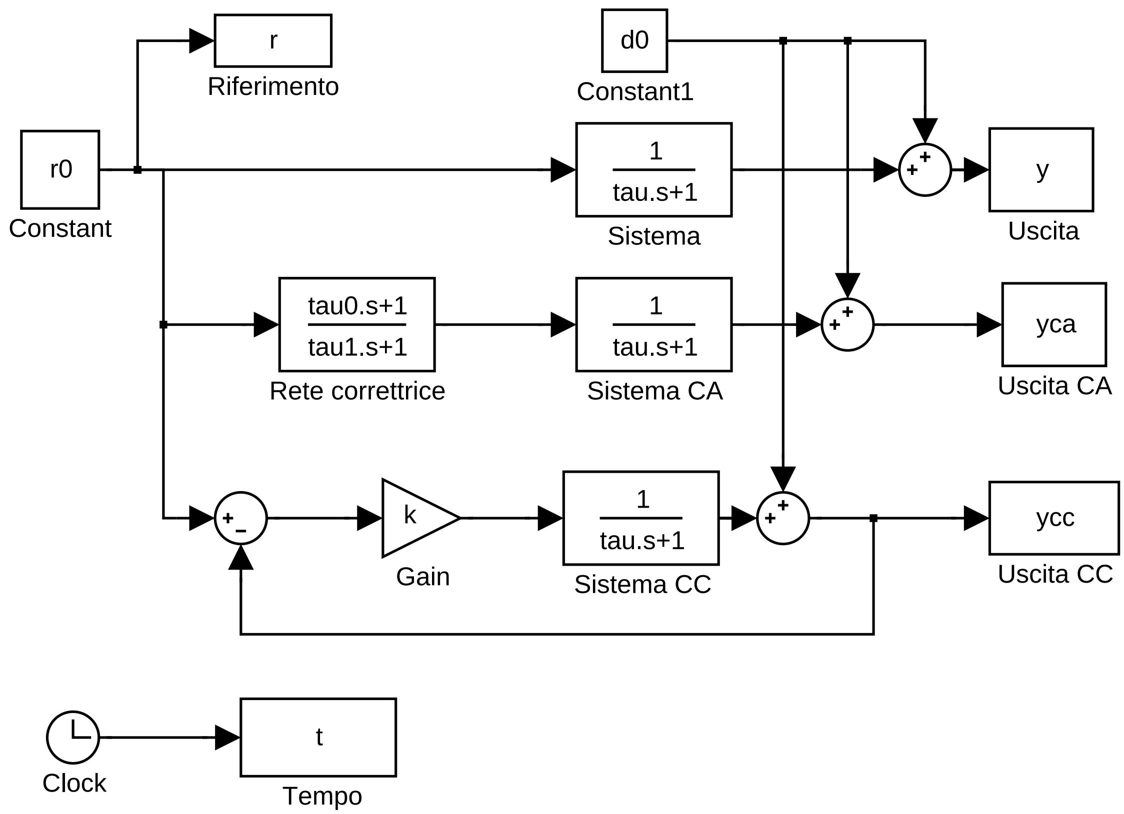

For the feedback system,the following relations hold:

$$G_0(s) = \frac{k}{1+k+\tau\, s} = \frac{\frac{k}{1+k}}{1+\frac{\tau}{1+k}\, s} = \frac{k_1}{1+\tau_1\, s} \qquad \Leftrightarrow \qquad k = \frac{\tau}{\tau_1} - 1.$$

This scheme can be run by using the following Matlab function (variation.m):

```
%%%%%%%%%%%%%%%%%%%%%%%%%%%%%%%%%%%%%%%%%%%%%%%%%%%%%%%%%%%%%%%%%%%%%%%%
%   variazione.M                                                       %
%%%%%%%%%%%%%%%%%%%%%%%%%%%%%%%%%%%%%%%%%%%%%%%%%%%%%%%%%%%%%%%%%%%%%%%%
r0=1;           % ampiezza del gradino
d0=0.0;         % disturbo sull'uscita
tau=40;         % valore nominale della costante di tempo del sistema
tau0=tau;       % valore REALE della costante di tempo del sistema
tau1=1;         % costante di tempo desiderata dal sistema controllato
k=tau/tau1 -1;  % valore del guadagno che garantisce la costante di tempo desiderata
tfin=2*tau ;    % durata della simulazione
sim('variazionemdl',tfin);      % simulazione del sistema
figure(1); clf;
lw=1.8;         % Spessore della linea
plot(t,r,':'); hold on
h=plot(t,y,'-.');   set(h,'linewidth',lw)
h=plot(t,yca,'--'); set(h,'linewidth',lw)
h=plot(t,ycc,'-');  set(h,'linewidth',lw)
title('Risposte: sistema originario (-.), catena aperta (--), retroazionato (-)');
xlabel('t (sec)');  ylabel('Posizione X_s (m)');
grid on; zoom on
```

The step responses of the three systems in the nominal case are the following:

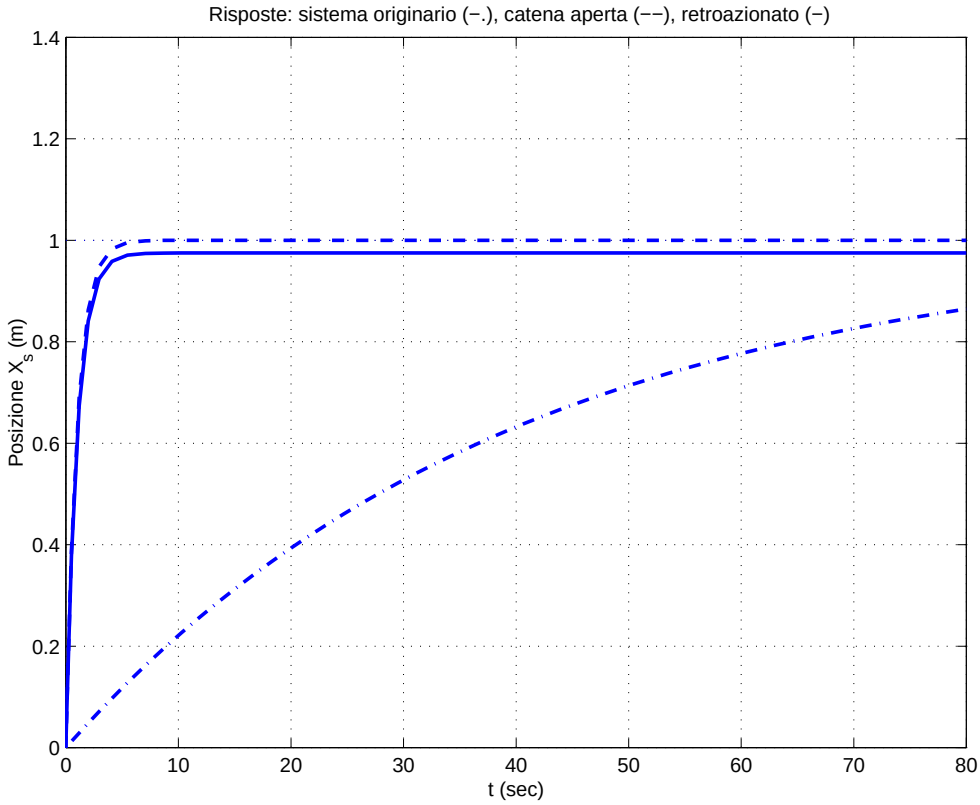

If a negative 50% variation of parameter τ is considered ($\tau = 0.5\,\tau_0$), the following step responses are obtained:

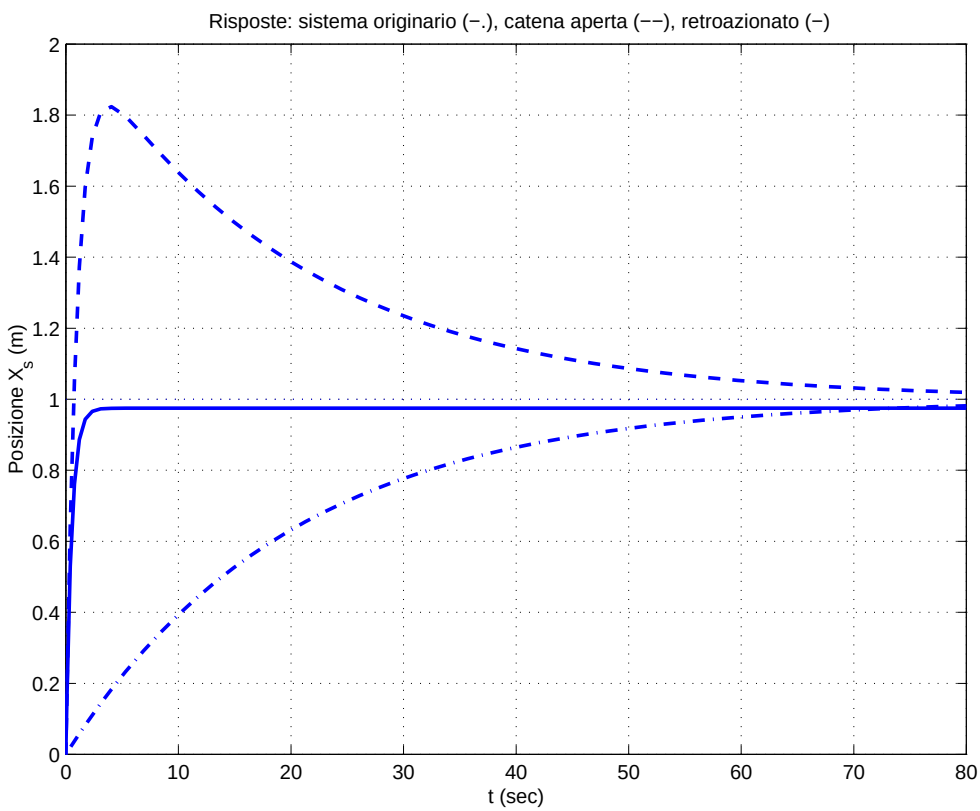

If a positive 50% variation of parameter τ is considered ($\tau = 1.5\,\tau_0$), the following step responses are obtained:

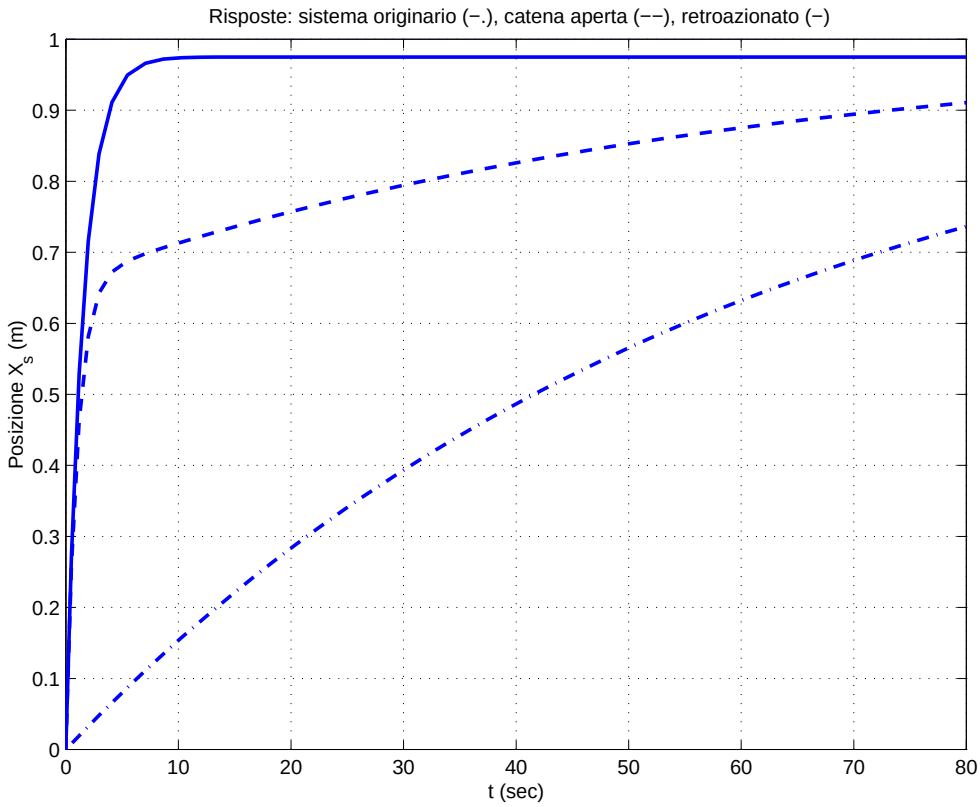
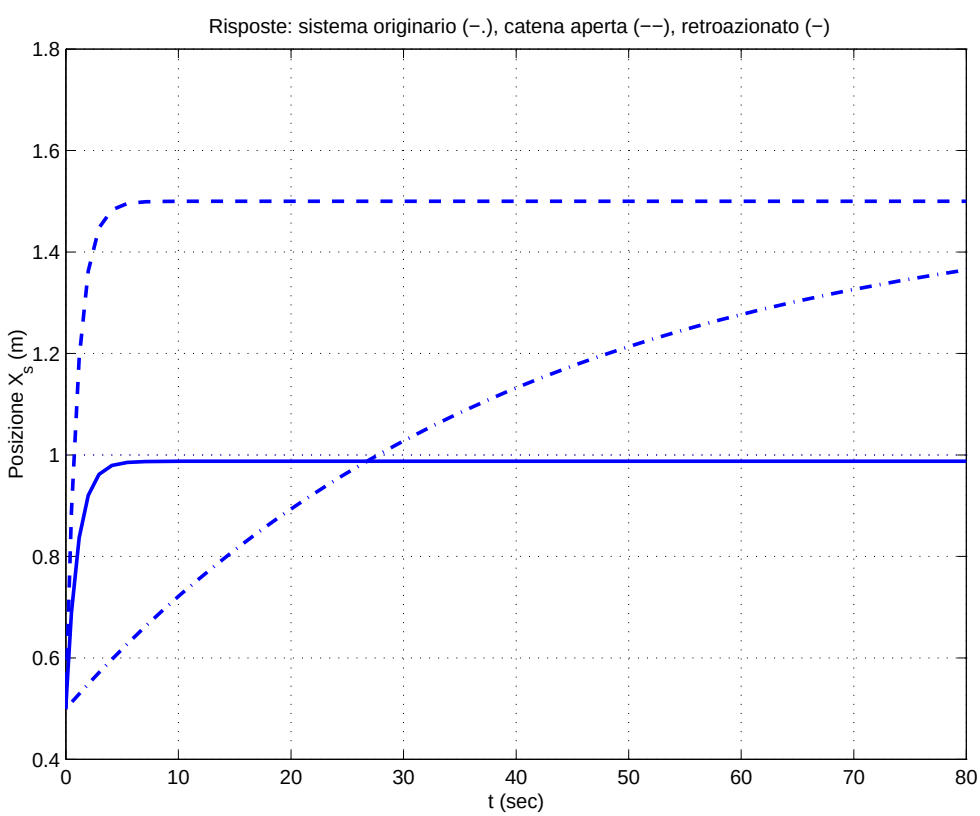
The step responses obtained in nominal condition ($\tau = \tau_0$) when a disturbance $d_0 = 0.5$ acts on the output, are the following: