Root locus

- Consider the following feedback scheme:

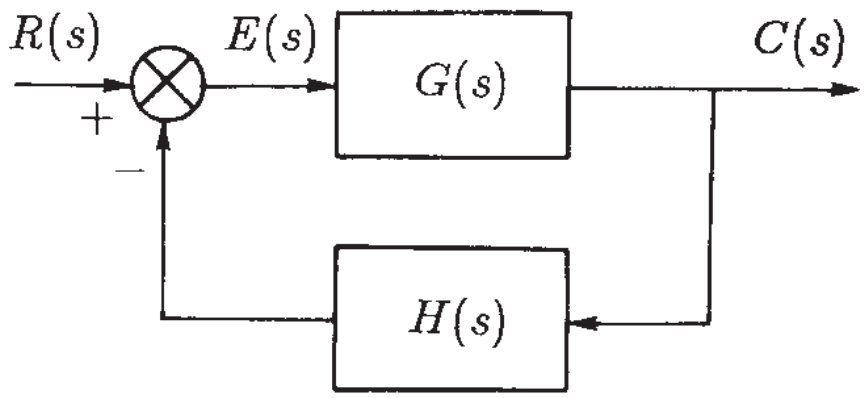

- The transfer function $G_0(s)$ of the feedback system is:

$$G_0(s) = \frac{G(s)}{1 + G(s)\,H(s)}$$

The poles of the feedback system coincide with the roots of the following characteristic equation:

$$1 + G(s)\,H(s) = 0$$

- let us suppose that function $G(s)\,H(s)$ is given in the following poles-zeros factorized form:

$$F(s) = G(s)\,H(s) = K_1\,\frac{(s - z_1)\,(s - z_2)\,\ldots\,(s - z_m)}{(s - p_1)\,(s - p_2)\,\ldots\,(s - p_n)}\,, \qquad n \geq m$$

where K_1 is positive constant.

- When parameter K_1 ranges from 0 to ∞, the roots of the characteristic equation (and therefore the poles of the feedback system) draw a set of curves on the complex plane called the "*root locus*" of function $F(s)$.

- The root locus graphically shows how the poles of the feedback systems moves on the complex plane when the gain changes from 0 to ∞.

- If $G_1(s)$ is defined as follows:

$$G_1(s) := \frac{(s-z_1)\,(s-z_2)\,\ldots\,(s-z_m)}{(s-p_1)\,(s-p_2)\,\ldots\,(s-p_n)}$$

the characteristic equation of the feedback system can be rewritten as

$$1 + K_1\,G_1(s) = 0$$

- If the constant K_1 is positive, we have:

$$|G_1(s)| = \frac{1}{K_1}\,, \qquad \arg G_1(s) = (2\,\nu + 1)\,\pi \qquad (\nu \text{ integer})$$

- If K_1 is negative, we have:

$$|G_1(s)| = -\frac{1}{K_1}\,, \qquad \arg G_1(s) = 2\,\nu\,\pi \qquad (\nu \text{ integer})$$

- The phase equation $\arg G_1(s) = (2\,\nu + 1)\,\pi$ is used for plotting the root locus. The modulus equation is uses to compute the values of K_1 corresponding to the points s which belong to the root locus:

$$K_1 = \frac{-1}{G_1(s)}.$$

- Example. Given the system

$$G(s)\,H(s) = \frac{K_1}{s\left(s + \frac{1}{\tau}\right)}$$

the corresponding root locus when K_1 ranges from 0 to ∞ is shown on the aside figure.

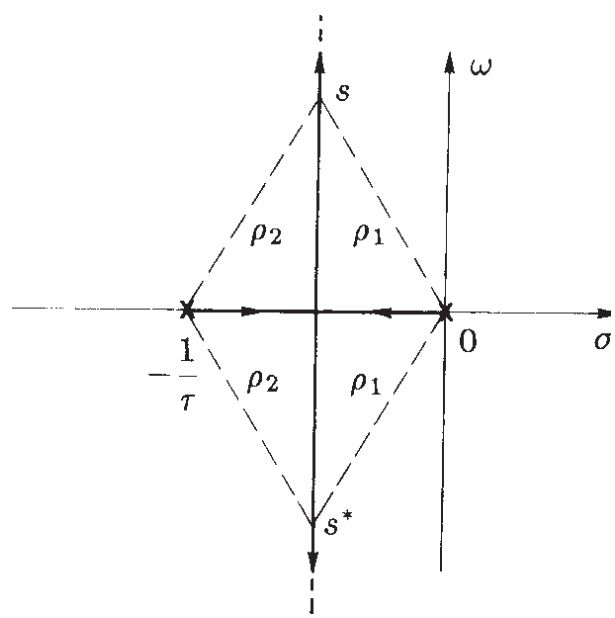

Properties of the root locus

The root locus satisfies the following properties.

- **Property 1.** The root locus has as many branches as the number of poles of the open loop transfer function $K_1\, G_1(s)$. Each branch starts at a pole of function $G_1(s)$ and ends in a zero of function $G_1(s)$ or at the infinity.

- **Property 2.** The root locus is symmetrical with respect to the real axis.

- **Property 3.** If constant K_1 is positive, a point of the real axis belongs to the root locus if an **odd number** of poles and zeros is left to its right. If constant K_1 is negative, a point of the real axis belongs to the root locus if an **even number** of poles and zeros is left to its right.

- **Property 4.** Let K_1 be a positive constant. For $K_1 = 0^+$ the root locus leaves a pole p_i with the following angle:

$$(2\,\nu + 1)\,\pi + \sum_{j=1}^{m} \arg\left(p_i - z_j\right) - \sum_{j \in \mathcal{J}'} \arg\left(p_i - p_j\right)\ ,$$

where $\mathcal{J}' := \{1, 2, \ldots, i-1, i+1, \ldots, n\}$. For $K_1 \to \infty$ the root locus tends to a zero z_i with the following angle:

$$(2\,\nu + 1)\,\pi - \sum_{j \in \mathcal{J}''} \arg\left(z_i - z_j\right) + \sum_{j=1}^{n} \arg\left(z_i - p_j\right)\ ,$$

where is $\mathcal{J}'' := \{1, 2, \ldots, i-1, i+1, \ldots, m\}$. If the constant K_1 is negative, in the previous statements the term $(2\nu+1)\,\pi$ must be replaced by term $2\nu\pi$.

- Example:

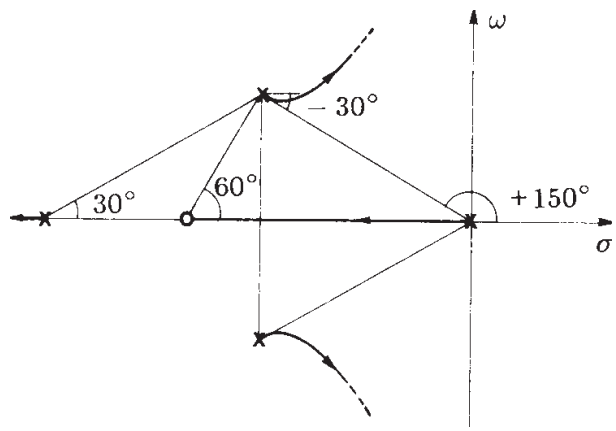

- **Property 5.** A root of order h corresponds to a point "s_h" which belongs to h branches of the root locus. The point "s_h" satisfies the characteristic equation $1 + K_1 G_1(s) = 0$ and its derivatives with respect to s up to the order $(h-1)$:

$$\frac{d}{ds} G_1(s) = 0, \quad \ldots \quad , \frac{d^{h-1}}{ds^{h-1}} G_1(s) = 0$$

Case $h = 2$: for increasing values of parameter K_1, two branches of the root locus enter the point s_2 in opposite directions, and then exit point s_2 along directions which are perpendicular to the entering directions.

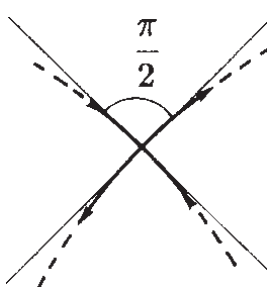

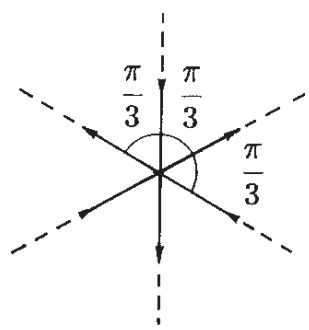

- **Property 6.** In the neighborhood of a root s_h is of order h, in the rot locus there are h branches entering the point s_h and h branches existing the same point. The entering and the exiting branches alternates each other, and locally they divide the plane into equal sectors of π/h radians.

- **Property 7.** The number of the asymptotes of the root locus is equal to the relative degree: $r = n - m$. The asymptotes are half lines which divide the plane in equal sectors, and which exit from the following point of the real axis:

$$\sigma_a = \frac{1}{n-m}\left(\sum_{i=1}^{n} p_i - \sum_{i=1}^{m} z_i\right)$$

If constant K_1 is positive, the asymptotes form the following angles with the real axis:

$$\vartheta_{a,\nu} = \frac{(2\,\nu+1)\,\pi}{n-m} \qquad (\nu = 0,\, 1,\, \ldots\,,\, n-m-1)$$

If constant K_1 is negative, the asymptotes form the following angles with the real axis:

$$\vartheta_{a,\nu} = \frac{2\,\nu\,\pi}{n-m} \qquad (\nu = 0,\, 1,\, \ldots\,,\, n-m-1)$$

- The points where the root locus intersects the imaginary axis can be determined using the Routh criterion: the parameters K^* and ω^* provided both the value of parameter $K_1 = K^*$ and the frequency $\omega = \omega^*$ for which the root locus intersects the imaginary axis.

Example. Let us consider the following transfer function:

$$G(s)\,H(s) = \frac{K_1}{s\,(s+1)\,(s+2)} \ .$$

Since $n-m=3$, the root locus has three asymptotes which intersect in the following point:

$$\sigma_a = \frac{0-1-2}{3} = -1$$

and which form the following angles with the real axis:

$$\vartheta_{a0} = 60^\circ \ , \quad \vartheta_{a1} = 180^\circ \ , \quad \vartheta_{a2} = -60^\circ$$

The root locus is the following:

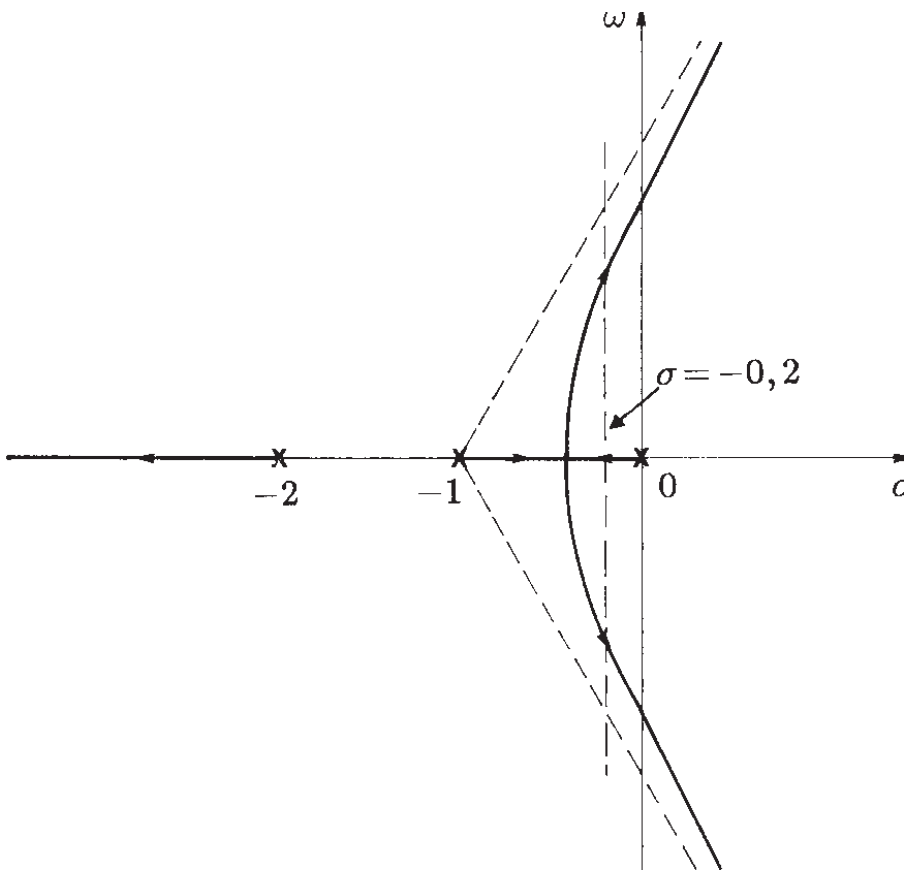

Note: when parameter K_1 increases, the feedback system becomes unstable.

The branching point on the real axis can be determined by solving the following equation:

$$\frac{d}{ds}[1 + G(s)\,H(s)] = 0 \qquad \rightarrow \qquad 3\,s^2 + 6\,s + 2 = 0 \ .$$

The equation has two real solutions: $s_1 = -0.422$ and $s_2 = -1.577$. The first solution s_1 belongs to the root locus for $K_1 > 0$, the second solution s_2 belongs to the root locus for $K_1 < 0$.

The intersection with the imaginary axis can be determined using the Routh criterion. The characteristic equation is:

$$1 + G(s)H(s) = 0 \qquad \Rightarrow \qquad s\,(s+1)\,(s+2) + K_1 = 0$$

that is

$$s^3 + 3\,s^2 + 2\,s + K_1 = 0$$

The Routh table is:

$$\begin{array}{c|cc} 3 & 1 & 2 \\ 2 & 3 & K_1 \\ 1 & (6-K_1)/3 & 0 \\ 0 & K_1 & \end{array}$$

The feedback system is stable for $0 < K_1 < K^* = 6$. Using the auxiliary equation:

$$3\,s^2 + 6 = 0$$

one obtains the points $s_{1,2} = \pm j\omega^*$ and the frequency $\omega^* = \sqrt{2} = 1.41$ where the root locus intersections the imaginary axis.

Example. Qualitatively draw the root locus of the following system:

$$G(s) = \frac{K(s+4)}{s(s+3)}$$

when $K > 0$. The characteristic equation of the feedback system is:

$$1 + \frac{K(s+4)}{s(s+3)} = 0$$

The root locus of the feedback system when $K > 0$ is:

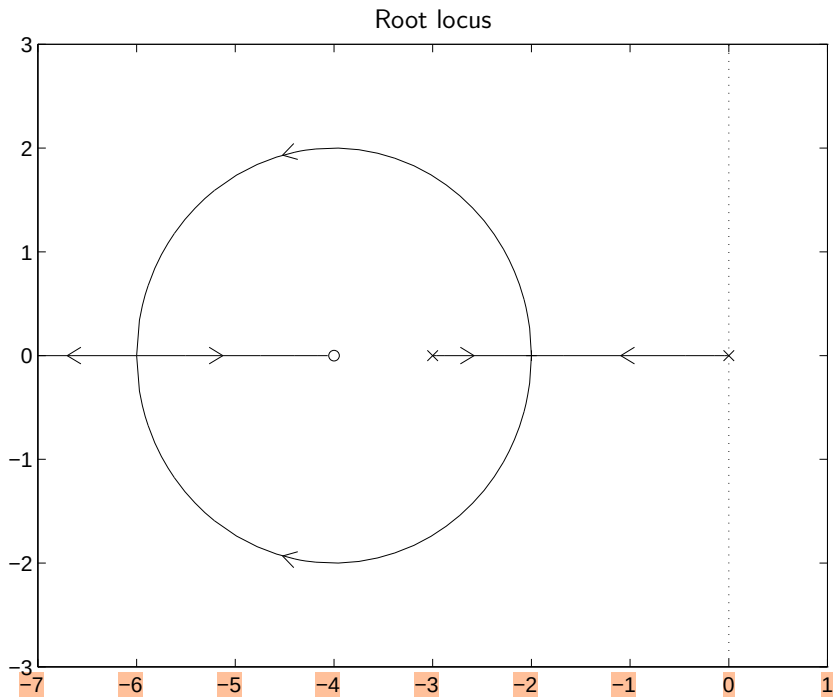

The branch points on the real axis can be determined as follows:

$$\frac{d}{d\,s}\left[\frac{K(s+4)}{s(s+3)}\right] = 0 \quad \rightarrow \quad s(s+3) - (s+4)(2s+3) = 0 \quad \rightarrow \quad s^2 + 8s + 12 = 0$$

The branch points are placed in $\sigma_1 = -2$ and in $\sigma_1 = -6$. The corresponding values of K are obtained as follows:

$$K_1 = -\left.\frac{1}{G(s)}\right|_{s=\sigma_1} = 1, \qquad K_2 = -\left.\frac{1}{G(s)}\right|_{s=\sigma_1} = 9$$

Note. When the two branches of the root locus of a system having only two poles and one zero exit the real axis, they move along a circumference having its center in the zero and a radius $R = \sqrt{d_1 d_2}$, where d_1 and d_2 are the distance of the two poles from the zero. In the considered case we have:

$$R = \sqrt{(4-1)(4-3)} = 2.$$

Some examples of places of roots

- Root locus of first-order systems:

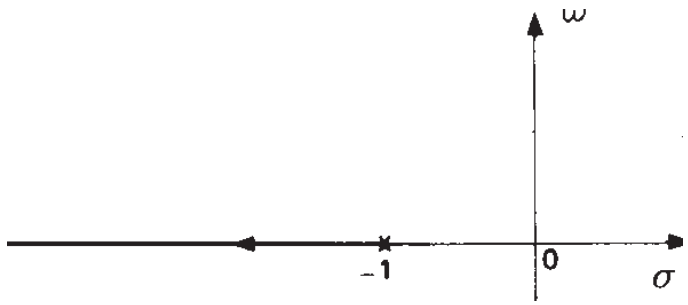

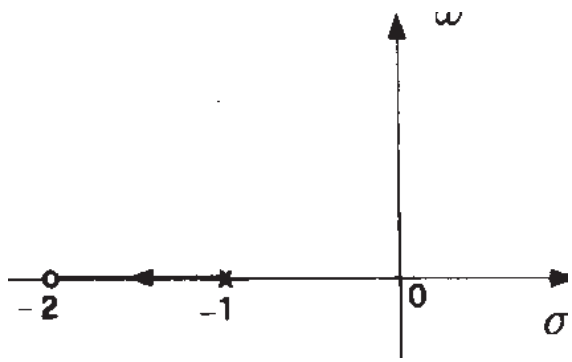

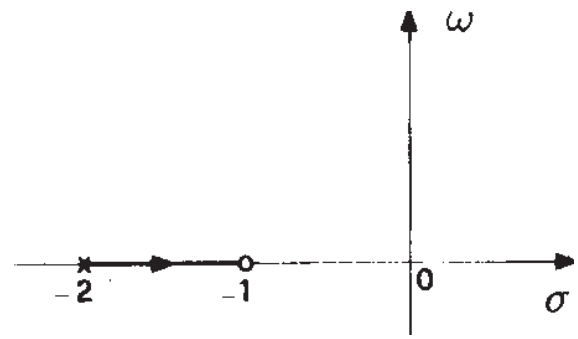

- Root locus of second-order systems:

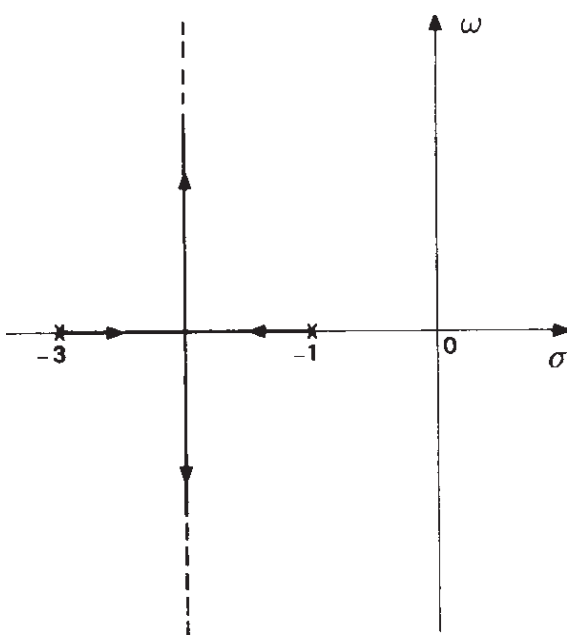

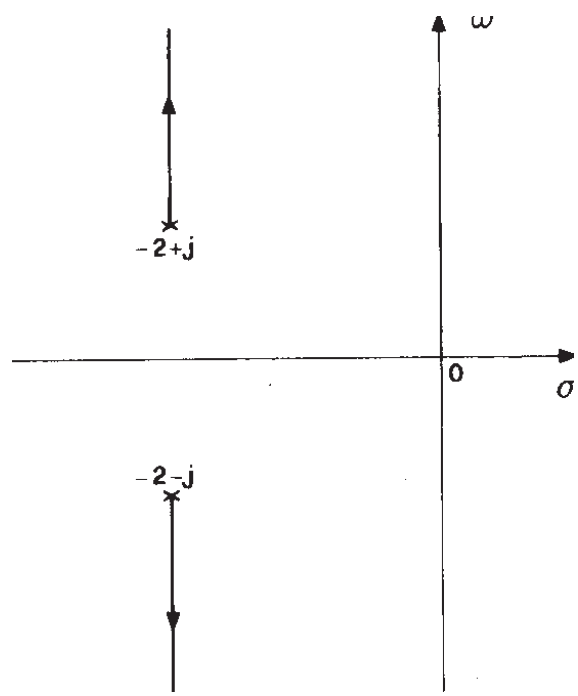

- Root locus of second-order systems:

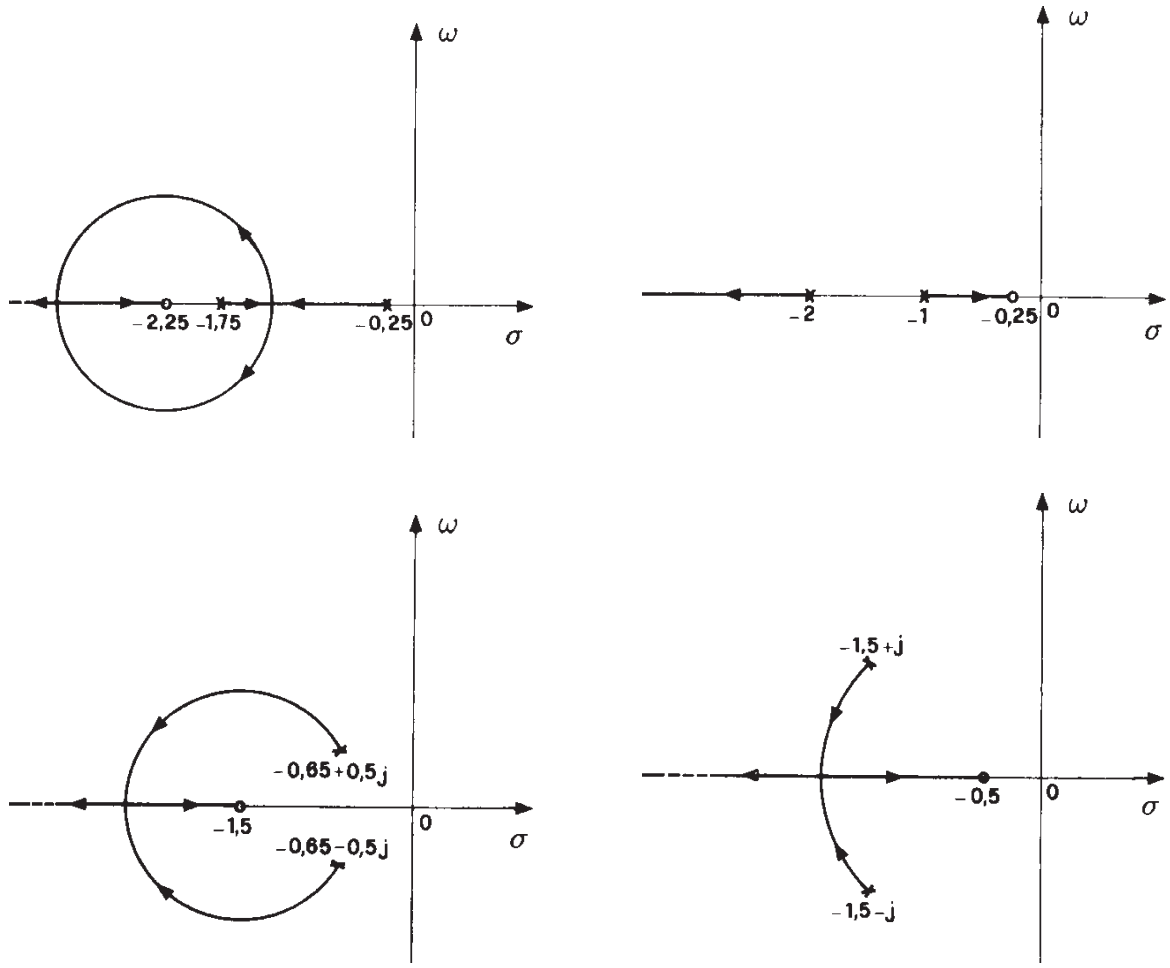

- Root locus of third-order systems:

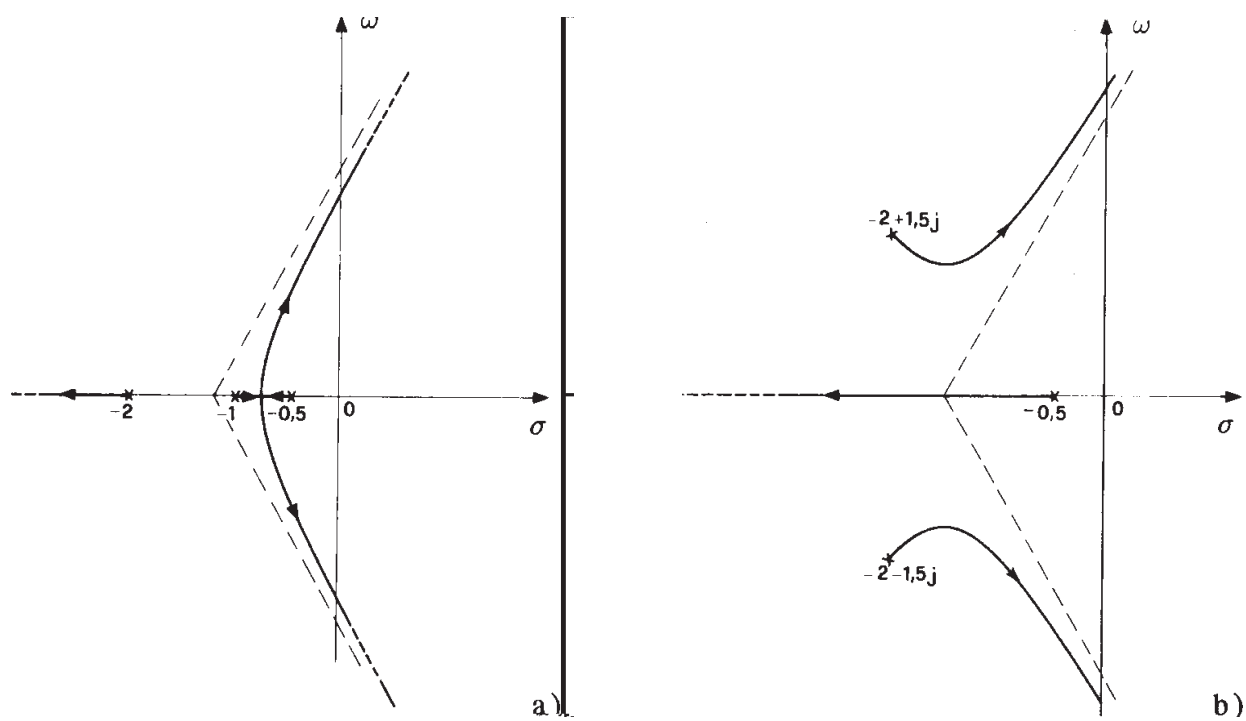

- Root locus of third-order systems:

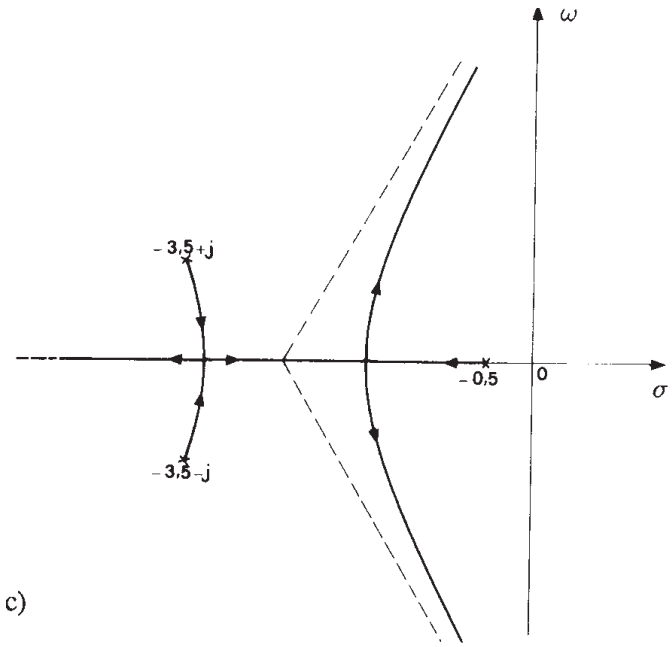

c)

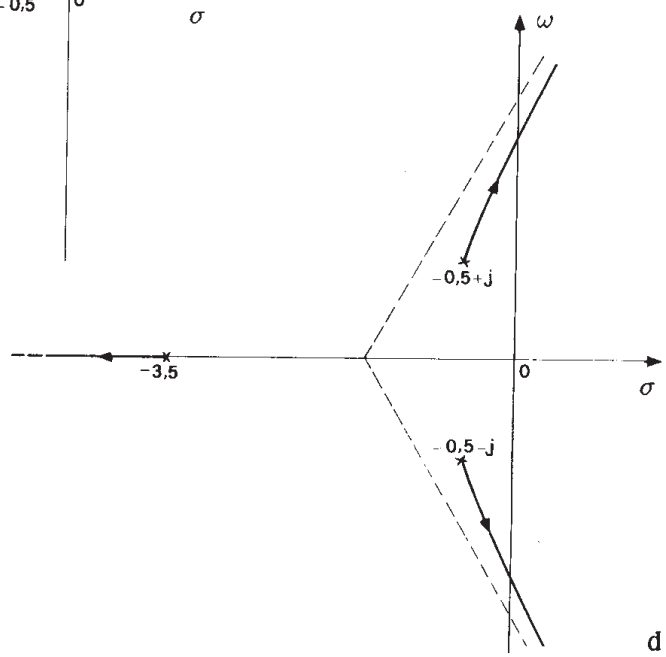

d)

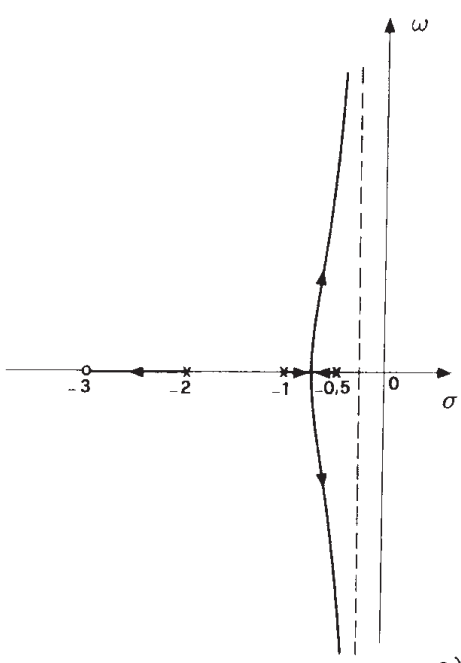

e)

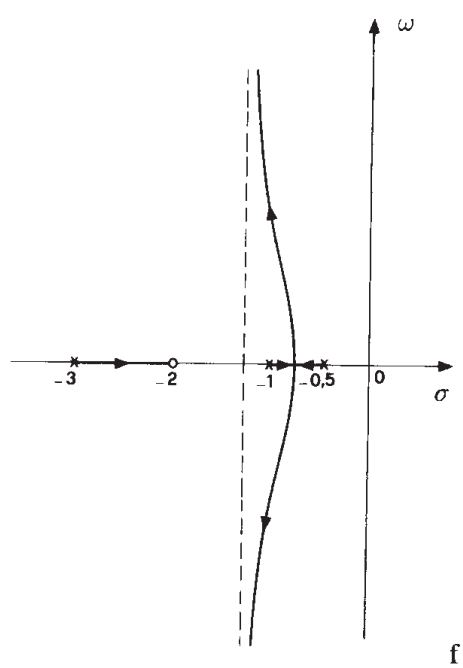

f)

- Root locus of fourth-order systems:

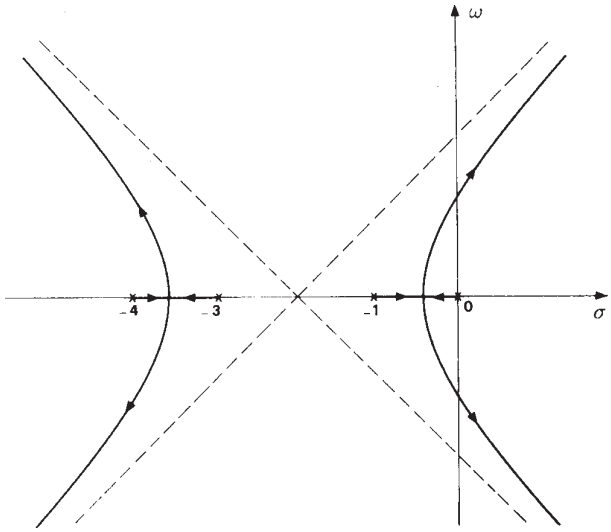

a)

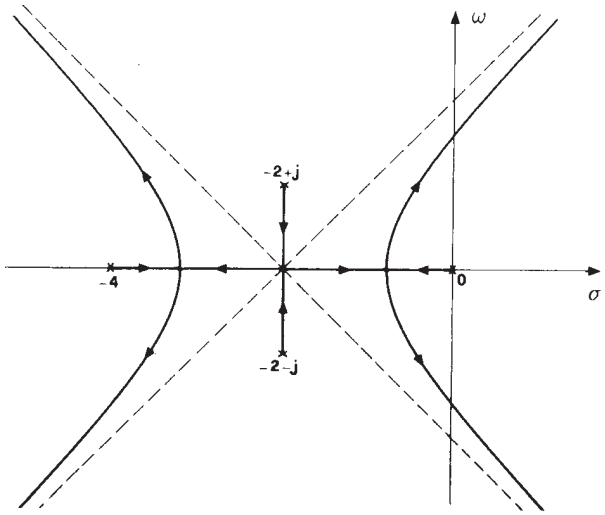

b)

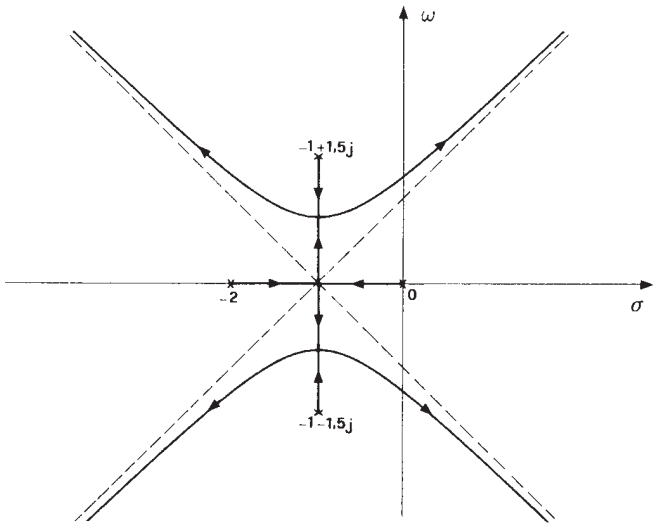

c)

Nonlinear systems: equilibrium points

• Let us consider the following feedback nonlinear system:

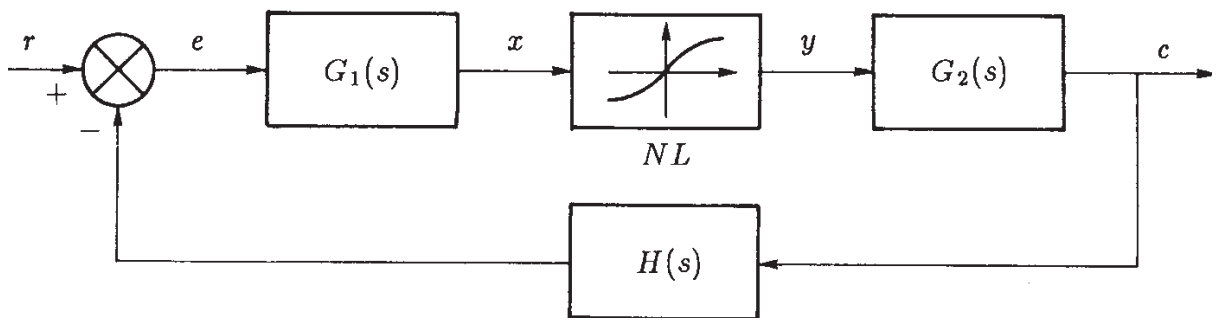

• Let us suppose that the reference signal r_1 is constant.

• The *equilibrium points* (x_i, y_i) of the considered nonlinear system can easily be determined graphically:

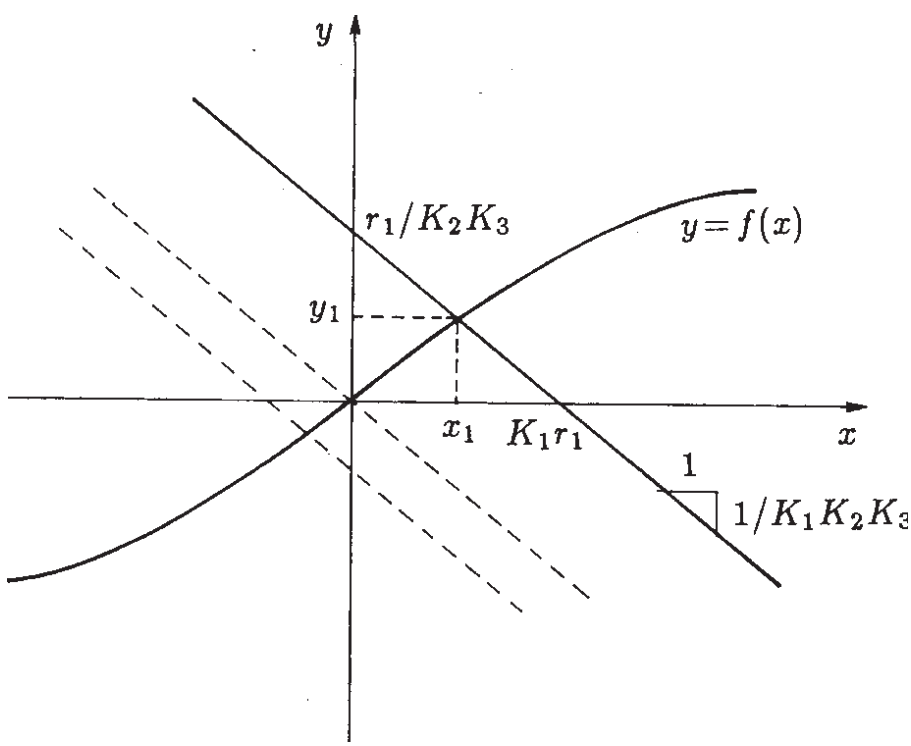

• The equilibrium point (x_1, y_1) is the intersection of the non linear function $y = F(x)$ with the following straight line which describes the steady-state behavior of the linear part of the considered feedback system:

$$x = K_1\, r - K_1\, K_2\, K_3\, y$$

where $K_1 := G_1(0)$, $K_2 := G_2(0)$, $K_3 := H(0)$ are the static gains of the system.

• As the input r changes, the load line moves parallel to itself, and the equilibrium point moves along the characteristic of the nonlinear element.

Special cases:

1) If the system $G_1(s)$ is of type 1 (ie it has a pole in the origin), the corresponding static gain is $K_1 = \infty$ and the load line becomes

$$r = K_2\, K_3\, y \qquad \rightarrow \qquad y = \frac{1}{K_2\, K_3}\, r$$

The corresponding graphic construction is:

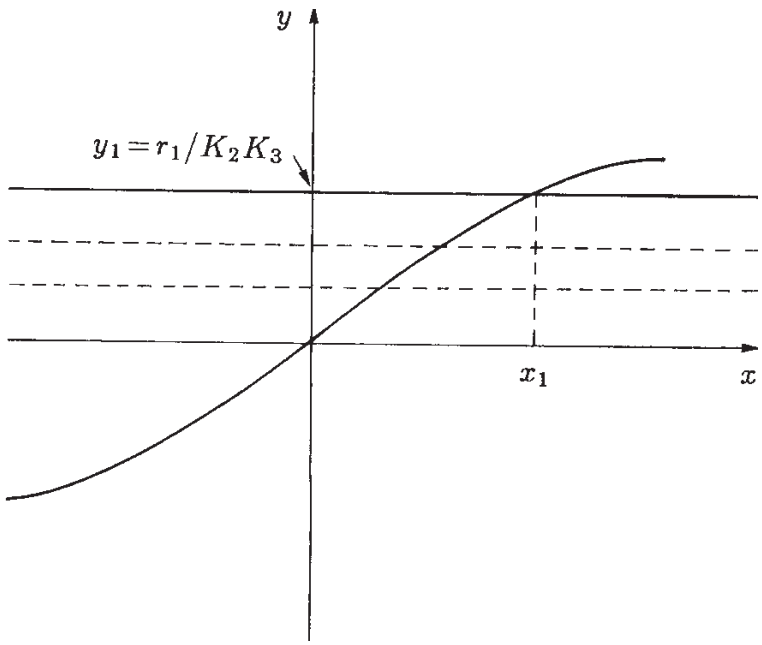

2) If the system $G_2(s)$[or the system $H(s)$] is of type 1, the corresponding static gain is $K_2 = \infty$ $(K_3 = \infty)$ and the load line becomes

$$y = 0$$

In this case the equilibrium point is given by the intersection of the function $y = f(x)$ with the axis of abscissas $y = 0$.

• The local behavior of the system depends on the particular equilibrium point considered and therefore on the value of r_1.

• In the case of linear systems, the dynamic behavior is identical in the neighborhood of any equilibrium point.

• In the case of non-linear systems, on the other hand, there is talk of stability of a point of equilibrium and not of stability of the system;

• The stability of a particular equilibrium point of a non-linear system can depend on the perturbation entity.

• The control devices must be designed in such a way that the controlled system is *globally asymptotically stable*, that is asymptotically stable: a) for any equilibrium point in which the system can lead to changes in the entrance; b) per disturbance of any entity.

• Operating the change of variables $\Delta x := x - x_1$, $\Delta y := y - y_1$ and $\Delta r := r - r_1$, the previous feedback system can be represented (equivalently) by the following scheme:

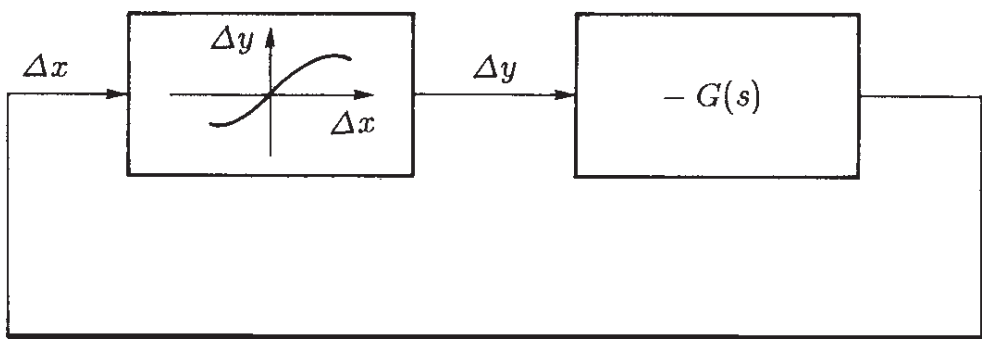

where you place $G(s) := G_1(s)\, G_2(s)\, H(s)$. The origin of the new coordinate system $(\Delta x,\, \Delta y)$ coincides with the equilibrium point x_1, y_1.

• When r is constant or slowly variable, the study of the stability of the nonlinear feedback system can be done by referring to the latter autonomous system (ie, it is devoid of inputs).

• Another notable difference between the behavior of linear systems and that of nonlinear systems is that they can also have *limit cycles* /, that is of asymptotically stable self-sustaining periodic motions.

• The study of the limit cycles is also important in relation to the control systems since when, increasing the ring gain, these are brought into instability conditions, they generally assume a stable periodic motion, due to the fact that the inevitable saturations limit the excursions of the different variables and therefore prevent the indefinite exaltation of the self-sustained oscillations.